MECHANICAL NOTES

1. ALL WORK SHALL BE DONE IN ACCORDANCE WITH STATE AND CITY CODES, 2016 CBC, 2016 CALIFORNIA FIRE CODE, STATE OF CALIFORNIA BUILDING ENERGY EFFICIENCY STANDARDS, 2016 CMC, AND ALL OTHER APPLICABLE CODES.
2. THE CONTRACTOR SHALL FURNISH ALL MATERIALS, LABOR, EQUIPMENT, TRANSPORTATION, AND SERVICES NECESSARY FOR THE COMPLETION OF THE WORK. ALL MATERIALS & WORK SHALL BE IN COMPLIANCE WITH ALL APPLICABLE CODES AND GOVERNING REGULATIONS AND SHALL MEET WITH THE APPROVAL OF THE CITY AND STATE FIRE MARSHAL.
3. ALL DRAWINGS ARE CONSIDERED TO BE PART OF THE CONTRACT DOCUMENTS. THE CONTRACTOR SHALL BE RESPONSIBLE FOR THE REVIEW AND COORDINATION OF ALL DRAWINGS AND SPECIFICATIONS PRIOR TO ANY CONSTRUCTION, INCLUDING ARCHITECTURAL, STRUCTURAL, AIR CONDITIONING, PLUMBING, AND ELECTRICAL. ANY DISCREPANCIES THAT OCCUR SHALL BE BROUGHT TO THE ATTENTION OF THE ENGINEER PRIOR TO THE START OF CONSTRUCTION SO THAT A CLARIFICATION MAY BE ISSUED. ANY WORK PERFORMED IN CONFLICT WITH THE CONTRACT DOCUMENTS OR ANY CODE REQUIREMENT SHALL BE CORRECTED BY THE CONTRACTOR AT THEIR OWN EXPENSE, AND AT NO EXPENSE TO THE OWNER.
4. DO NOT SCALE DRAWINGS - ALL DIMENSIONS AND JOB SITE CONDITIONS SHALL BE VERIFIED BY THE CONTRACTOR AT THE JOB SITE PRIOR TO BID SUBMITTAL, START OF CONSTRUCTION AND/OR FABRICATION OF MATERIALS. ANY DISCREPANCIES BETWEEN EXISTING CONDITIONS AND DRAWINGS WHICH PREVENTS THE INSTALLATION OF EQUIPMENT, DUCTWORK AND PIPING AS SHOWN SHALL BE BROUGHT TO THE ARCHITECT'S ATTENTION.
5. CONTRACTOR SHALL COORDINATE ALL DUCT, PIPE AND EQUIPMENT LOCATIONS WITH PLUMBING, ELECTRICAL, STRUCTURAL, AND ALL OTHER TRADES. ENSURE THAT ALL CONTROL DEVICES, MANUAL VOLUME DAMPERS, SHUT-OFF VALVES, FILTERS ETC. ARE ACCESSIBLE FOR MAINTENANCE.
6. DUCTWORK SHALL BE CONSTRUCTED, ERECTED & TESTED IN ACCORDANCE WITH THE MOST RESTRICTIVE OF LOCAL REGULATIONS AND PROCEDURES DETAILED IN THE A.S.H.R.A.E. HANDBOOK OF FUNDAMENTALS OR THE APPLICABLE STANDARDS ADOPTED BY S.M.A.C.N.A. PROVIDE RECTANGULAR DUCTS OF GALVANIZED STEEL & PREFABRICATED SPIRAL LOCKSEAM DUCTS AND FITTINGS.
7. DUCT MATERIALS SHALL COMPLY WITH ANSI/SMACNA 006-2006 HVAC DUCT CONSTRUCTION STANDARDS - METAL AND FLEXIBLE, 3RD EDITION.
8. PROVIDE DUCT MANUAL VOLUME DAMPERS IN EACH BRANCH DUCT AND IN EACH MAIN DUCT TO PROVIDE FOR COMPLETE AIR BALANCE OF THE SYSTEM. PROVIDE ADEQUATE ACCESS AND IDENTIFICATION.
9. ALL DUCTWORK AND PIPING SHALL BE INSULATED CONSISTENTLY WITH THE REQUIREMENTS OF SECTIONS 118, 123, AND 124 OF 2016 ENERGY EFFICIENCY STANDARDS (E.E.S.) AND TABLES 6-6A AND 6-6B OF 2016 C.M.C. INSULATION MATERIAL SHALL MEET THE CALIFORNIA QUALITY STANDARD PER SECTION 118 OF THE E.E.S.
10. ROOM THERMOSTATS SHALL BE CAPABLE OF BEING SET TO MAINTAIN SPACE TEMPERATURE SET POINTS FROM 55 °F. TO 85 °F. AND BE CAPABLE OF OPERATING THE HEATING AND COOLING IN SEQUENCE. THERMOSTATS SHALL BE ADJUSTABLE TO PROVIDE A TEMPERATURE RANGE OF UP TO 10°F. BETWEEN FULL HEATING AND FULL COOLING BEING SUPPLIED. CONTROLS SHALL HAVE CAPABILITY OF TERMINATING ALL HEATING AT A TEMPERATURE NOT MORE THAN 70 °F. AND COOLING AT A TEMPERATURE NOT LESS THAN 78° F.
11. TEMPERATURE CONTROL SHALL BE PROVIDED VIA FACTORY PROGRAMMABLE THERMOSTATS.
12. WALL MOUNTED THERMOSTATS SHALL BE MOUNTED 48" A.F.F. TO THE HIGHEST OPERABLE PART. TEMPERATURE SENSORS SHALL BE WALL MOUNTED 60" A.F.F.
13. AIR FILTERS SHALL BE CERTIFIED BY THE MANUFACTURER AND INSTALLED IN COMPLIANCE WITH SECTIONS 407.3.2 AND 408 OF THE 2016 C.M.C.
14. FLEXIBLE DUCTS OF NO MORE THAN 10 FEET IN LENGTH MAY BE USED TO CONNECT SUPPLY, RETURN OR EXHAUST AIR TERMINAL DEVICES TO RIGID DUCT SYSTEMS PER SECTION 602.3.1 OF 2016 C.M.C.
15. CEILING DIFFUSERS SHALL BE 4-WAY THROW UNLESS SHOWN OTHERWISE.
16. MINIMUM OUTDOOR AIR REQUIREMENTS : 15 C.F.M. / PERSON.
17. H.V.A.C. SYSTEMS SHALL MEET THE CONTROL REQUIREMENTS PER SECTIONS 110.2 & 120.2 OF THE 2016 E.E.S. THERMOSTATIC CONTROLS SHALL BE PROVIDED FOR EACH ZONE.
18. SEALANTS SHALL COMPLY WITH UL 181, UL 181A, OR UL 181B, AND BE NONTOXIC AND WATER RESISTANT PER THE 2016 E.E.S. CHAPTER 3, SEC 124 & CHAP 7, SEC 150(m).
19. SEALANTS FOR EXTERIOR APPLICATIONS SHALL PASS ASTM TESTS C 731, C 732, AND D 2202. SEALANTS AND MESHES SHALL BE RATED FOR EXTERIOR USE. PER E.E.S. SECTION 124
19. MECHANICAL EQUIPMENT, DUCTWORK AND PIPING SHALL BE BRACED OR ANCHORED TO RESIST HORIZONTAL AND VERTICAL FORCES PRESCRIBED IN THE 2016 C.B.C. AND ASCE7-05. ALL ATTACHMENTS TO THE STRUCTURE FOR SUPPORT OF EQUIPMENT, PIPING AND DUCTWORK NOT SPECIFICALLY DETAILED SHALL BE IN ACCORDANCE WITH CURRENT OSHPD PRE-APPROVED SYSTEMS (OPA). FOR SEISMIC RESTRAINTS OF MECHANICAL SYSTEMS AND PLUMBING PIPING SYSTEMS: MASON OPA 0349, I.S.A.T. OPA 0485, OR APPROVED EQUAL MANUFACTURER WITH OPA NUMBER.

MECHANICAL LEGEND

SYMBOL	ABBREV.	DESCRIPTION
10 x 6	10 x 6	NEW DUCTWORK (1ST NUMBER INDICATES SIDE SHOWN, DOUBLE OR SINGLE LINE)
	T.V.	SQUARE ELBOW WITH TURNING VANES
		ROUND ELBOW OR RECTANGULAR RADIUS ELBOW
	M.O.D.	MOTOR OPERATED DAMPER
	M.V.D.	MANUAL VOLUME DAMPER
	F.S.D.	COMBINATION FIRE AND SMOKE DAMPER
	F.C.	FLEXIBLE CONNECTION (DUCTWORK)
UP		DUCT RISE
DN		DUCT DROP
		DUCT UP
		DUCT DOWN
		DUCT TRANSITION (RECTANGULAR TO RECTANGULAR)
		DUCT TRANSITION (RECTANGULAR TO ROUND)
		WALL RETURN REGISTER OR GRILLE WALL EXHAUST REGISTER OR GRILLE
		FLEXIBLE DUCTWORK
		ACCESS DOOR/ACCESS PANEL
	SA	SUPPLY AIR DUCT
	RA / OSA	RETURN AIR DUCT/OUTSIDE AIR DUCT
	EA / EXH	EXHAUST AIR DUCT
OR		CEILING DIFFUSER
OR		RETURN REGISTER / GRILLE
OR		EXHAUST REGISTER OR GRILLE
(T) AC-1	T'STAT	THERMOSTAT (# INDICATES EQUIPMENT OR ZONE SERVED)
(H) H-1	H'STAT	HUMIDISTAT (# INDICATES EQUIPMENT OR ZONE SERVED)
(SD)	S.D.	SMOKE DETECTOR (DUCT MOUNTED)
(X#)		CONTROL TRANSFORMER #

SYMBOL	ABBREV.	DESCRIPTION
	A.F.F.	ABOVE FINISH FLOOR
	B.H.P.	BRAKE HORSEPOWER
	B.T.U.H.	BRITISH THERMAL UNITS PER HOUR
¢	C.F.M.	CUBIC FEET PER MINUTE
	D.B.	DRY BULB
Ø	DIA.	DIAMETER
	E.W.T.	ENTERING WATER TEMPERATURE
	E.S.P.	EXTERNAL STATIC PRESSURE
	F.P.M.	FEET PER MINUTE
	FLR.	FLOOR
	F.L.A.	FULL LOAD AMPS
	G.P.M.	GALLONS PER MINUTE
	GALV.	GALVANIZED
	GA.	GAUGE
	KW	KILOWATTS
◒	L.O.D.	LIMIT OF DEMOLITION
	L.W.T.	LEAVING WATER TEMPERATURE
	L.R.A.	LOCKED ROTOR AMPS
	M.B.H.	THOUSANDS OF B.T.U.'S PER HOUR
	N.T.S.	NOT TO SCALE
	P.O.C.	POINT OF CONNECTION
	P.S.I.G.	POUNDS PER SQUARE INCH GAUGE
	P.D.	PRESSURE DROP
	R.L.A.	RUNNING LOADS AMPS
	R.P.M.	REVOLUTIONS PER MINUTE
	S.F.	SQUARE FEET
	S.P.	STATIC PRESSURE
	T.S.P.	TOTAL STATIC PRESSURE
	TYP.	TYPICAL
	VTR	VENT THROUGH ROOF
	V./PH./HZ.	VOLTS/PHASE/HERTZ
	W.B.	WET BULB

PLUMBING / FIRE NOTES

1. ALL PIPES, EQUIPMENT AND CONDUIT SHALL BE SUPPORTED AND BRACED SMACNA GUIDELINES FOR SEISMIC RESTRAINT OF MECHANICAL SYSTEMS AND PLUMBING PIPING SYSTEMS. SEE PLUMBING AND FIRE PROTECTION SPECIFICATION FOR SEISMIC AND HANGER REQUIREMENTS.
2. ALL ATTACHMENTS TO THE STRUCTURE FOR SUPPORT OF EQUIPMENT, PIPING AND DUCTWORK NOT SPECIFICALLY DETAILED SHALL BE IN ACCORDANCE WITH SMACNA GUIDELINES FOR SEISMIC RESTRAINTS OF MECHANICAL SYSTEMS AND PLUMBING PIPING SYSTEMS.
3. COORDINATE INSTALLATION OF ALL EQUIPMENT, PIPING AND DUCTWORK WITH OTHER TRADES PRIOR TO INSTALLATION. ENSURE THAT ALL CONTROL DEVICES, MANUAL VOLUME DAMPERS, SHUT-OFF VALVES, FILTERS ETC. ARE ACCESSIBLE FOR MAINTENANCE.
4. ANCHORAGE OF EQUIPMENT WEIGHING LESS THAN 400 POUNDS AND SUPPORTED DIRECTLY ON THE FLOOR OR ROOF STRUCTURE, FURNITURE OR TEMPORARY OR MOVABLE EQUIPMENT AND EQUIPMENT WEIGHTING LESS THAN 20 POUNDS THAT IS SUPPORTED BY VIBRATION ISOLATION DEVICES SUSPENDED FROM THE ROOF, WALL OR FLOOR NEED NOT BE DETAILED ON THE PLANS. (CBC TITLE 24 PART 2 SECTION 1613A) HOWEVER, SUCH EQUIPMENT MUST BE SUPPORTED AND ANCHORED TO RESIST THE FORCES PRESCRIBED BY SECTION 1630B.2 AND THE ANCHORAGE SHALL BE APPROVED BY THE STRUCTURAL ENGINEER OF RECORD AND OSHPD AS A PART OF FIELD REVIEWS/ INSPECTIONS. THE INSPECTOR OF RECORD SHALL ASSURE THAT THE ABOVE REQUIREMENTS ARE ENFORCED.
5. CONTRACTOR SHALL VERIFY ALL LOCATIONS, SIZES, P.O.C'S, INVERT ELEVATIONS, AND AVAILABILITY OF ALL EXISTING UTILITIES PRIOR TO INSTALLATION OF ANY MATERIAL OR EQUIPMENT.
6. THESE DRAWINGS ARE ESSENTIALLY DIAGRAMMATIC AND ARE NOT INTENDED TO INDICATE ALL DETAILS AND NECESSARY OFFSETS OF PIPING. THE CONTRACTOR SHALL INSTALL MATERIAL AND EQUIPMENT IN A MANNER AS TO CONFORM TO STRUCTURE, AVOID OBSTRUCTIONS, PRESERVE HEADROOM, AND KEEP OPENINGS AND PASSAGEWAYS CLEAR. ALL INSTALLATIONS SHALL BE CONSISTENT WITH NORMALLY ACCEPTABLE INDUSTRY STANDARDS. THE CONTRACTOR SHALL NOTIFY THE ARCHITECT IN WRITING OF ANY DISCREPANCIES OR CONFLICTS THAT WOULD EFFECT THE SYSTEM PERFORMANCE OR INCUR ADDITIONAL COSTS. THIS NOTIFICATION SHALL BE SUBMITTED PRIOR TO INSTALLATION OF THE ITEMS CONCERNED.
7. ALL WORK SHALL BE DONE IN ACCORDANCE WITH ALL APPLICABLE CODES. NOTHING SHOWN ON THE PLANS OR STATED IN THE SPECIFICATIONS IS INTENDED TO INDICATE THAT THE INSTALLATIONS OR CONNECTIONS OF ANY ITEM OR DEVICE SHOULD BE DONE CONTRARY TO MANUFACTURERS INSTRUCTIONS AND ALL APPLICABLE CODES AND REGULATIONS. THE CONTRACTOR IS RESPONSIBLE TO INSURE THAT THE INSTALLATIONS AND CONNECTIONS OF ALL ITEMS AND DEVICES CONFORMS TO MANUFACTURERS INSTRUCTIONS AND TO ALL APPLICABLE CODES AND REGULATIONS.
8. ALL PLUMBING EQUIPMENT, MATERIAL, AND ALL CONNECTIONS THERETO SHALL BE INSTALLED COMPLETE PER MANUFACTURERS INSTRUCTIONS TO PROVIDE A COMPLETE AND FULLY OPERATIONAL SYSTEM.
9. PLANS FOR PROPOSED STAND PIPE SYSTEM MUST BE SUBMITTED TO THE FIRE DEPARTMENT FOR REVIEW PRIOR TO INSTALLATION.

PLUMBING LEGEND

SYMBOL	ABBREV.	DESCRIPTION
	W	SOIL OR WASTE BELOW SLAB
	W	SOIL OR WASTE ABOVE SLAB
ED		EMERGENCY DRAIN PIPING
OF		OVERFLOW DRAIN PIPING
RW		RAINWATER (STORM) DRAIN PIPING
CD		CONDENSATE DRAIN
	V	VENT
	CW	COLD WATER
	HW	HOT WATER
	HWR	HOT WATER RETURN
	BL.V.	BALANCING VALVE
	B.V.	BALL VALVE (DETAIL)
	BF.V	BUTTERFLY VALVE
	P.V.	PLUG VALVE
	UP	RISE OR RISER
	DN	DOWN OR DROP
		CAP LINE
	F.C.	FLEXIBLE CONNECTION (PIPE)
	P.G.	PRESSURE GAUGE W/ GAUGE COCK
	TH.	THERMOMETER
DN		DIRECTION OF SLOPE DOWN
	F.C.O.	FLOOR CLEANOUT
	C.T.O.G.	CLEANOUT TO GRADE (FINISH SURFACE)
		PIPE ANCHOR
		VALVE ON RISE OR DROP

SHEET INDEX

MP0.01	MECHANICAL PLUMBING LEGENDS AND NOTES
MP0.02	MECHANICAL PLUMBING SCHEDULES
MP2.01	MECHANICAL PLUMBING GROUND LEVEL PLAN
MP2.02	MECHANICAL PLUMBING SECOND LEVEL PLAN
MP2.03	MECHANICAL PLUMBING THIRD (ROOF) LEVEL PLAN
MP3.01	MECHANICAL PLUMBING DETAILS
MP3.02	MECHANICAL PLUMBING DETAILS

2018.05.29 BIDSET

CUNINGHAM GROUP

Cuningham Group Architecture, Inc.
1030 G Street
San Diego, CA 92101
Tel: 619 849 1080
Fax: 619 849 1089
www.cuningham.com

Consultant

Dufoe consulting engineers
San Diego | Temecula
9665 Chesapeake Dr., Suite 320 San Diego, CA 92123
858-368-8630 Fax 866-517-3293 www.dce-inc.net

Revisions

No.	Date	Description

Document Phase:	Backcheck # 1
Date:	MAY 24th, 2018
PIC / AIC:	PS
Drawn By:	DL
Checked By:	TC
Comm. No.:	PR17-0311

Project Title

TCMC PARKING STRUCTURE AND MAIN ENTRY

Sheet Title

MECHANICAL PLUMBING LEGENDS AND NOTES

Sheet Number

MP0.01

Copyright © 2017 by Cuningham Group Architecture, Inc. (All Rights Reserved)

FAN COIL UNIT SCHEDULE

UNIT NO.	AREA SERVED	UNIT LOCATION	C.F.M.	EXT. SP.	COOLING COIL						HEATING COIL			FAN MOTOR				OPER. WEIGHT (LBS.)	MANUFACTURER & MODEL NO.	REMARKS
					TOTAL M.B.H.	SENS. M.B.H.	E.A.T. D.B.	E.A.T. W.B.	L.A.T. D.B.	L.A.T. W.B.	M.B.H.	E.A.T. (°F)	L.A.T. (°F)	V./PH./HZ.	H.P.	FLA	MOCP			
FC 1	STORAGE ROOM	STORAGE ROOM	380	0.18	10.89	7.73	75	63	55	54	14.3	65	85	208/1/60	N/A	N/A	N/A	40	CARRIER 40MBQB09D-3	1 3 4 5 6 7
FC 2	ELECTRICAL ROOM	ELECTRICAL ROOM	610	N/A	22.46	16.13	75	63	55	54	N/A	N/A	N/A	208/1/60	N/A	0.23	N/A	40	CARRIER 40MAQB24B-3	2 3 5 6 8
FC 3	ELEVATOR CONTROL ROOM	ELEVATOR CONTROL ROOM	510	N/A	14.28	10.91	75	63	55	54	N/A	N/A	N/A	208/1/60	N/A	0.17	N/A	26	CARRIER 40MAQB18B-3	2 3 5 6 8

1. DX COOLING/HEATING WITH REMOTE CONDENSING UNIT. FOR MOUNTING DETAIL, REFER TO DETAIL 2/MP3.02.
2. DUCTLESS DX COOLING FAN COIL WITH REMOTE CONDENSING UNIT. FOR MOUNTING DETAIL, REFER TO DETAIL 3/MP3.02.
3. INDOOR SHALL RECEIVE POWER FROM OUTDOOR UNIT.
4. FURNISHED WITH MFG FILTER, ACCESS / FILTER PLENUM MY MECHANICAL.
5. REFRIGERANT LINE SET PROVIDE BY UNIT MANUFACTURE.
6. ALUMINUM JACKET AND INSULATE BOTH REF. LIQUID AND SUCTION LINES, WATERTIGHT. REF. SUCTION 3/4" FULL LENGTH, REF. LIQUID 1/2" INSIDE ROOMS.
7. PROVIDE PROGRAMMABLE HEAT PUMP THERMOSTAT.
8. FIELD INSTALL WIRED CONTROL, DISABLE THE HEATING MODE.

CONDENSING UNIT SCHEDULE

UNIT NO.	AREA SERVED	UNIT LOCATION	TOTAL CAPACITY (TONS)	REFRIG. TYPE	SEER (EER)	HSPF (COP)	ELECTRICAL					OPER. WEIGHT (LBS.)	UNIT DIM. (IN.) W x D x H	MANUFACTURER & MODEL NO.	REMARKS
							V/PH./HZ	COMPRESSOR		MCA	MOCP				
								LRA	RLA						
CU 1	STORAGE ROOM	SEE PLANS	0.75	R-410A	19.0 (13)	11.1	208/1/60	N/A	5.25	9.0	15	95	32" x 13" x 22"	CARRIER 38MAQB09R-3	1
CU 2	ELECTRICAL ROOM	SEE PLANS	2.0	R-410A	20.5 (13.0)	N/A	208/1/60	N/A	14.0	20	30	146	33.27" x 14.29" x 27.64"	CARRIER 38MAQB24R-3	1
CU 3	ELEVATOR CONTROL ROOM	SEE PLANS	1.5	R-410A	20.0 (12.5)	N/A	208/1/60	N/A	12.3	18	25	118	31.50" x 13.11" x 21.81"	CARRIER 38MAQB18R-3	1

1. FOR MOUNTING DETAIL, REFER TO DETAIL 4/MP3.02.

PLUMBING FIXTURE SPECIFICATION & CONNECTION SCHEDULE

MARK	DESCRIPTION	MANUFACTURER/MODEL NUMBER	MINIMUM CONNECTION SIZE				COMMENTS
			WASTE	VENT	CW	HW	
AD-1	AREA DRAIN	MIFAB #F1000-C HEAVY DUTY DRAIN WITH FLASHING COLLAR AND STAINLESS STEEL ADJUSTABLE STRAINER.	SEE PLANS	-	-	-	NO TRAP PRIMERS
RD-1/OD-1	ROOF DRAIN	J.R. SMITH #1610 CANOPY DRAIN WITH FLASHING COLLAR AND ADJUSTABLE STRAINER HEAD.	SEE PLANS	-	-	-	CANOPY DRAIN
DN-1	DOWNSPOUT NOZZLE	ZURN #Z199 ALL NICKEL BRONZE BODY, OPTIONAL THREADED OR NO-HUB INLET AND DECORATIVE FACE OF WALL FLANGE AND OUTLET NOZZLE.	SEE PLANS	-	-	-	SEE PLANS FOR LOCATION

CUNINGHAM GROUP

Cuningham Group Architecture, Inc.

1030 G Street
San Diego, CA 92101

Tel: 619 849 1080
Fax: 619 849 1089

www.cuningham.com

Consultant

Dufoe consulting engineers
San Diego | Temecula
9665 Chesapeake Dr., Suite 320 San Diego, CA 92123
858-368-8630 Fax 866-517-3293 www.doe-inc.net

Revisions

No.	Date	Description

2018.05.29 BIDSET

Document Phase:	Backcheck # 1
Date:	MAY 24th, 2018
PIC / AIC:	PS
Drawn By:	DL
Checked By:	TC
Comm. No.:	PR17-0311

Project Title

TCMC PARKING STRUCTURE AND MAIN ENTRY

Sheet Title

MECHANICAL PLUMBING SCHEDULES

Sheet Number

MP0.02

Copyright © 2017 by Cuningham Group Architecture, Inc. (All Rights Reserved)

10/4/2017 1:55:50 PM
\\cga\Data\Project\170311\AC\Central\PR170311_TCMC_Parking_Structure\Mdg.rvt

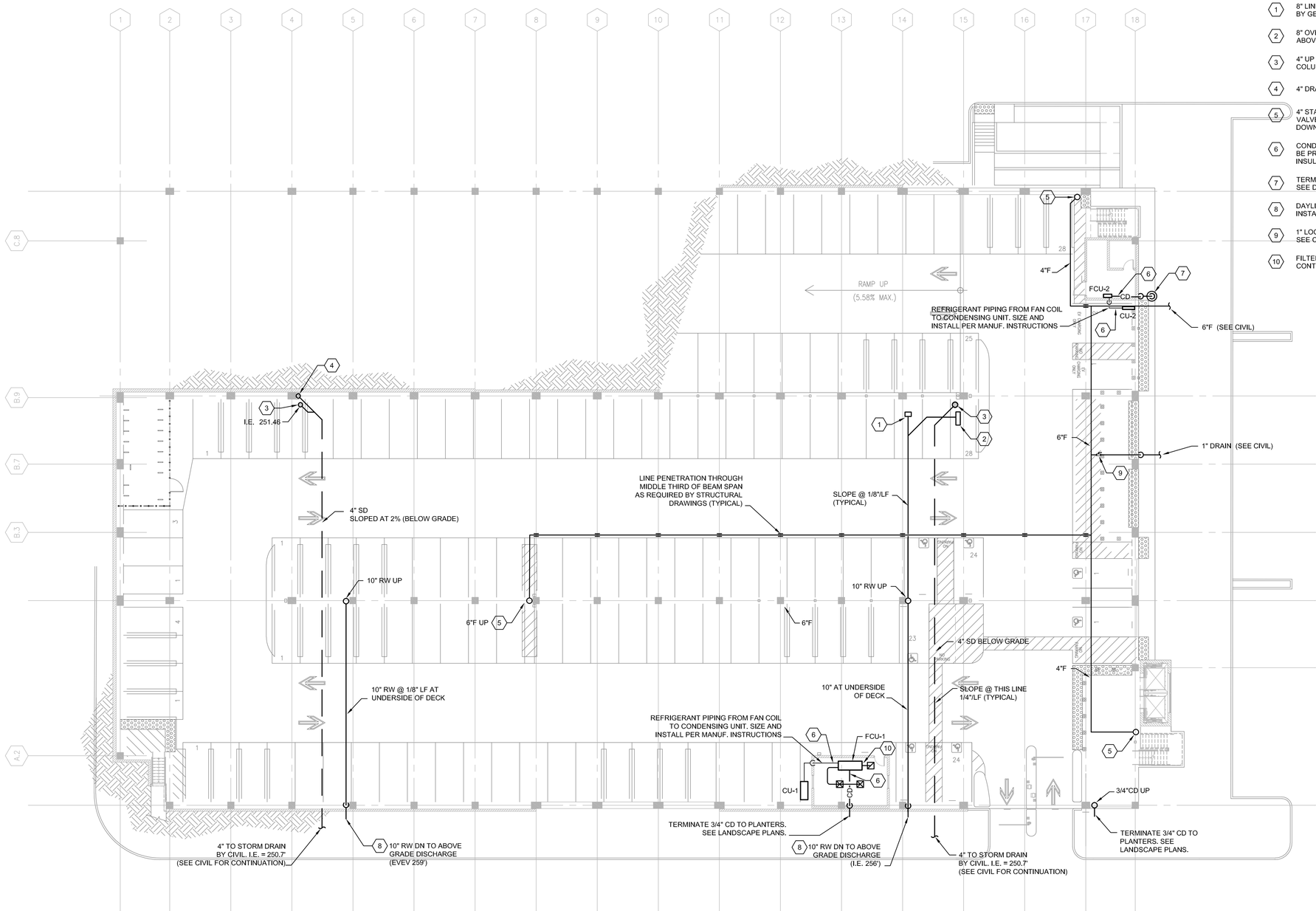

1 MECHANICAL PLUMBING GROUND LEVEL PLAN
1/16" = 1'-0"

NORTH

KEY NOTES:

1. 8" LINE CONNECTED TO BOX DRAIN ABOVE BY GENERAL CONTRACTOR.
2. 8" OVERFLOW CONNECTED TO BOX DRAIN ABOVE BY GENERAL CONTRACTOR.
3. 4" UP TO AD-1. CONNECT TO VERTICAL 4" AT COLUMN. 4" DN. TO BELOW GRADE.
4. 4" DRAIN DOWN TO BELOW GRADE
5. 4" STAND PIPE, 2-1/2" HOSE CONNECTION VALVED FOR FIRE DEPARTMENT USE. PIPE DOWN TO FLOOR / SUPPORT AT FLOOR.
6. CONDENSATE AND REFRIGERANT PIPING TO BE PROVIDED WITH 3/4" MINERAL FIBER INSULATION AND JACKETED.
7. TERMINATE 3/4" CD TO DRYWELL. SEE DETAIL 8/MP3.01.
8. DAYLIGHT 10" RW @ +6" AFG TO BIO-SWALE. INSTALL DOWNSPOUT NOZZLE (DN-1).
9. 1" LOCKED VALVE SYSTEM LOW POINT DRAIN, SEE CIVIL PLANS FOR CONTINUATION.
10. FILTER ACCESS PENTIUM BY MECHANICAL CONTROLS.

CUNINGHAM GROUP

Cuningham Group Architecture, Inc.
1030 G Street
San Diego, CA 92101
Tel: 619 849 1080
Fax: 619 849 1089
www.cuningham.com

Consultant

Dufoe consulting engineers
San Diego | Temecula
9665 Chesapeake Dr., Suite 320 San Diego, CA 92123
858-368-8630 Fax 866-517-3293 www.dce-inc.net

Revisions

No.	Date	Description

2018.05.29 BIDSET

Document Phase:	Backcheck # 1
Date:	MAY 24th, 2018
PIC / AIC:	PS
Drawn By:	DL
Checked By:	TC
Comm. No.:	PR17-0311

Project Title

TCMC PARKING STRUCTURE AND MAIN ENTRY

Sheet Title

MECHANICAL PLUMBING GROUND LEVEL PLAN

Sheet Number

MP2.01

Copyright © 2017 by Cuningham Group Architecture, Inc. (All Rights Reserved)

\\cga\Data\Project\17\0311\AV\Central\PR170311_TCMC_Parking_Structure\bldg.rvt
10/4/2017 1:35:50 PM

KEY NOTES:

1. 10"RW LINE CONNECTED TO BOX DRAIN ABOVE BY GENERAL CONTRACTOR.
2. 10"OF LINE CONNECTED TO BOX DRAIN ABOVE BY GENERAL CONTRACTOR.
3. RAMP TRENCH DRAIN BY GENERAL CONTRACTOR.
4. 4" OVERFLOW DRAIN (OD-1). SEE PLUMBING FIXTURE SCHEDULE.
5. 4"AD ROUTED DOWN TO GROUND LEVEL. SEE GROUND LEVEL PLAN FOR CONTINUATION.
6. 4" STAND PIPE, 2-1/2" HOSE CONNECTION VALVED FOR FIRE DEPARTMENT USE. PIPE DOWN TO FLOOR / SUPPORT AT FLOOR.
7. 2-1/2"FDC VALVED FOR FIRE DEPARTMENT CONNECTION.
8. CONDENSATE AND REFRIGERANT PIPING TO BE PROVIDED WITH 3/4" MINERAL FIBER INSULATION AND JACKETED.

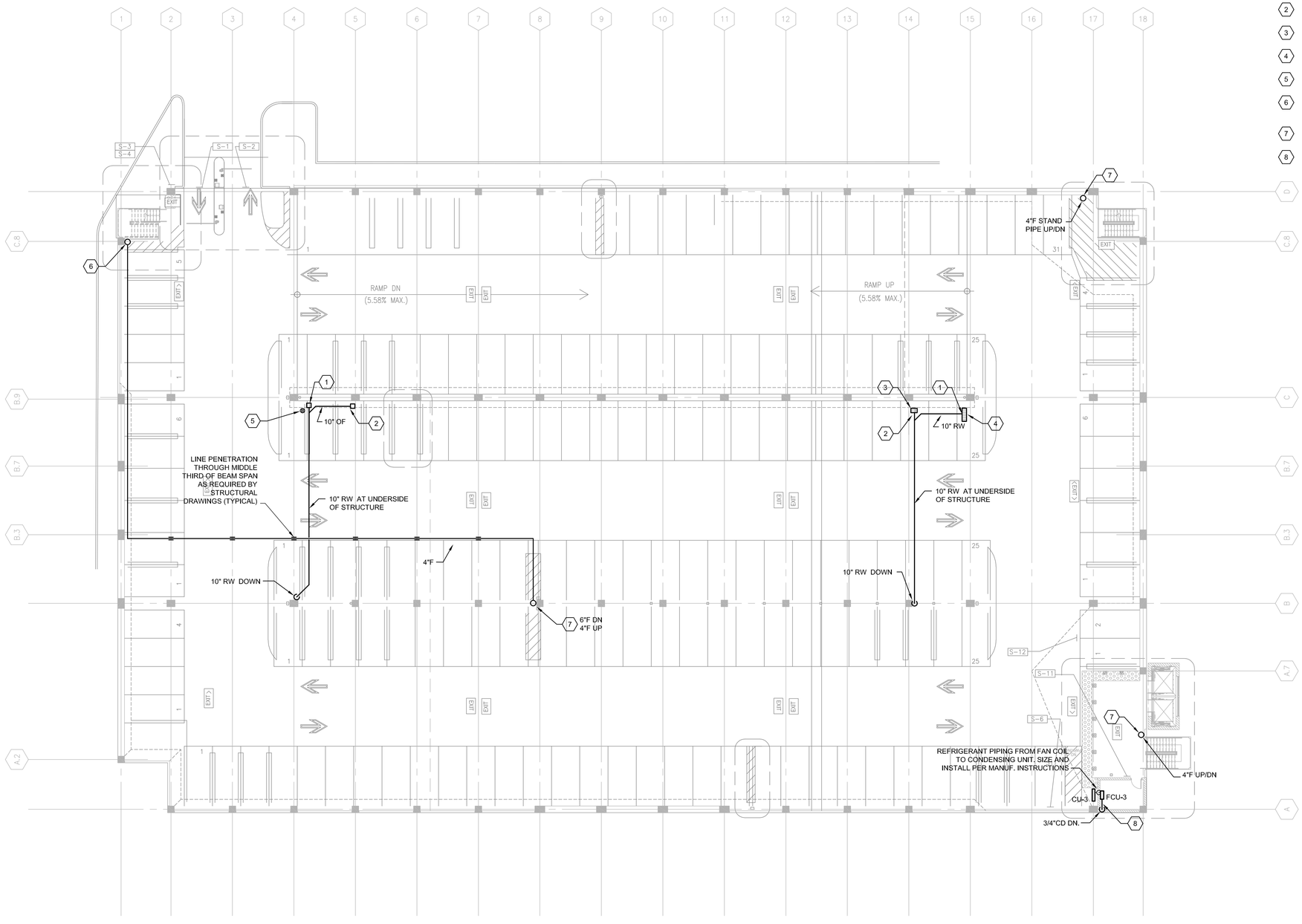

1 MECHANICAL PLUMBING SECOND LEVEL PLAN
1/16" = 1'-0"

NORTH

Cuningham Group Architecture, Inc.

1030 G Street
San Diego, CA 92101

Tel: 619 849 1080
Fax: 619 849 1089

www.cuningham.com

Consultant

Dufoe consulting engineers
San Diego | Temecula
9665 Chesapeake Dr., Suite 320 San Diego, CA 92123
858-368-8630 Fax 866-517-3293 www.doeinc.net

Revisions

No.	Date	Description

2018.05.29 BIDSET

Document Phase:	Backcheck # 1
Date:	MAY 24th, 2018
PIC / AIC:	PS
Drawn By:	DL
Checked By:	TC
Comm. No.:	PR17-0311

Project Title

TCMC PARKING STRUCTURE AND MAIN ENTRY

Sheet Title

MECHANICAL PLUMBING SECOND LEVEL PLAN

Sheet Number

MP2.02

Copyright © 2017 by Cuningham Group Architecture, Inc. (All Rights Reserved)

Vcgal/Data/Project/17/0311/ACDwrk/#PR170311_TCMC_Parking_Structure#dgy.rvt

10/4/2017 1:55:50 PM

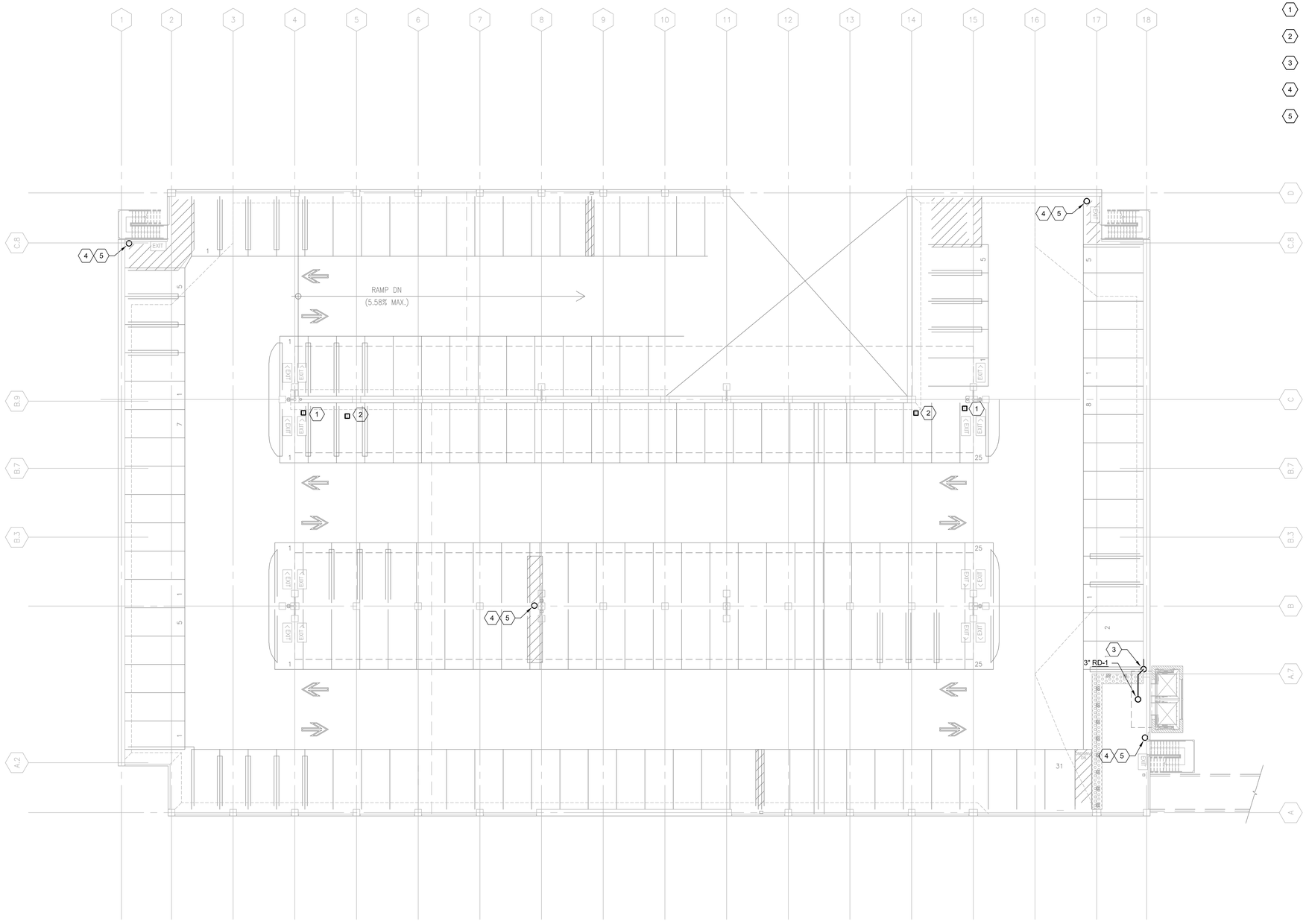

1 MECHANICAL PLUMBING THIRD (ROOF) LEVEL PLAN
1/16" = 1'-0"

NORTH

KEY NOTES:

1. ROOF DRAIN RECEPTOR BY GARAGE CONTRACTOR. SEE DETAIL 8/A7.01.
2. OVERFLOW DRAIN RECEPTOR BY GARAGE CONTRACTOR. SEE DETAIL 8/A7.01.
3. RD-1 IN ROOF CANOPY. ROUTE LINE TO COLUMN, DRAIN ON DECK.
4. 4"F DN. WITH PROTECTED PRESSURE GAUGE AT TOP OF STAND PIPE.
5. PROVIDE 2-1/2" VALVED FDC FOR FIRE DEPARTMENT USE.

CUNINGHAM GROUP

Cuningham Group Architecture, Inc.
1030 G Street
San Diego, CA 92101
Tel: 619 849 1080
Fax: 619 849 1089
www.cuningham.com

Consultant

Dufoe consulting engineers
San Diego | Temecula
9665 Chesapeake Dr., Suite 320 San Diego, CA 92123
858-368-8630 Fax 866-517-3293 www.doe-inc.net

Revisions

No.	Date	Description

Document Phase:	Backcheck # 1
Date:	MAY 24th, 2018
PIC / AIC:	PS
Drawn By:	DL
Checked By:	TC
Comm. No.:	PR17-0311

Project Title

TCMC PARKING STRUCTURE AND MAIN ENTRY

Sheet Title

MECHANICAL PLUMBING THIRD (ROOF) LEVEL PLAN

Sheet Number

MP2.03

2018.05.29 BIDSET

Copyright © 2017 by Cuningham Group Architecture, Inc. (All Rights Reserved)

\\cga\Data\Projects\17\0311\AnCentral\PR170311_TCMC_Parking_Structure\bldg.rvt
10/4/2017 1:35:50 PM

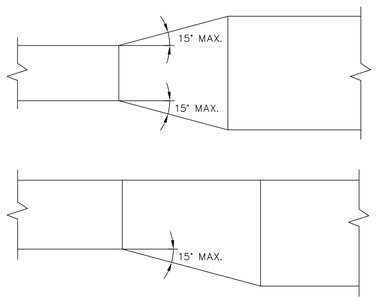

DUCT TRANSITION DETAIL

SCALE: NONE

6

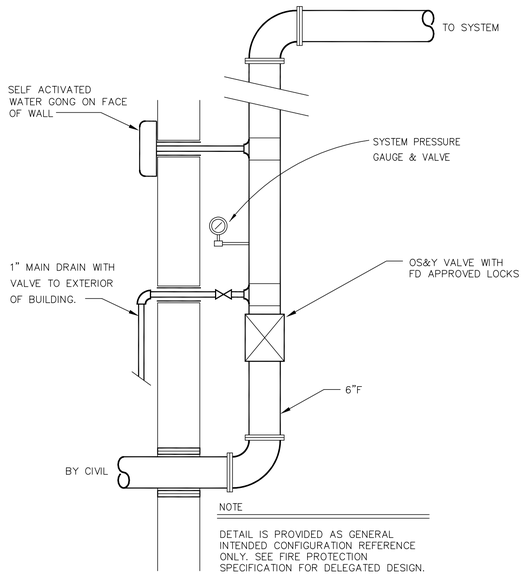

FIRE RISER DETAIL

SCALE: NONE

7

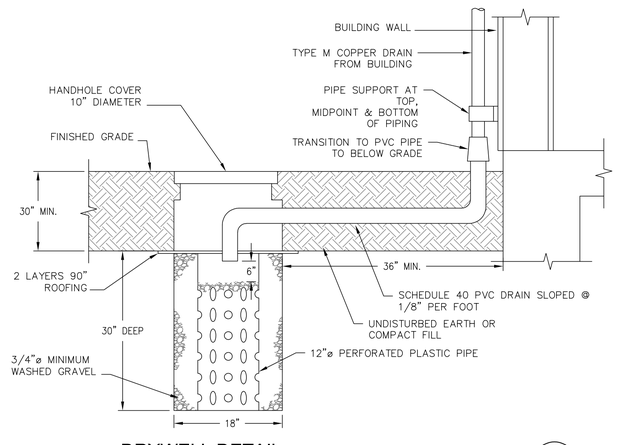

DRYWELL DETAIL

SCALE: NONE

8

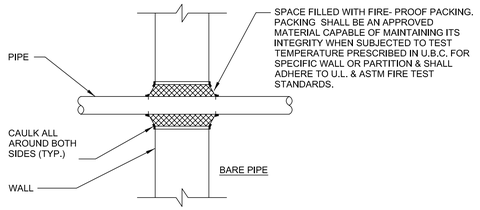

PIPE PENETRATION DETAIL

SCALE: NONE

4

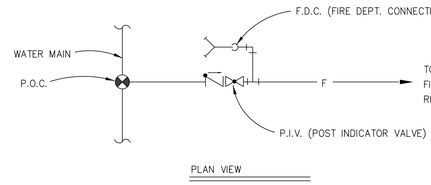

FIRE SPRINKLER NOTE

THE FACILITY SHALL BE PROVIDED WITH CLASS I WET STANDPIPE SYSTEM. THE SYSTEM SHALL BE DESIGNED & INSTALLED BY A LICENSED FIRE SPRINKLER CONTRACTOR & PER REQUIREMENTS OF NFPA & LOCAL FIRE MARSHAL.

FIRE SERVICE DETAIL (PROVIDED BY CIVIL)

SCALE: NONE

5

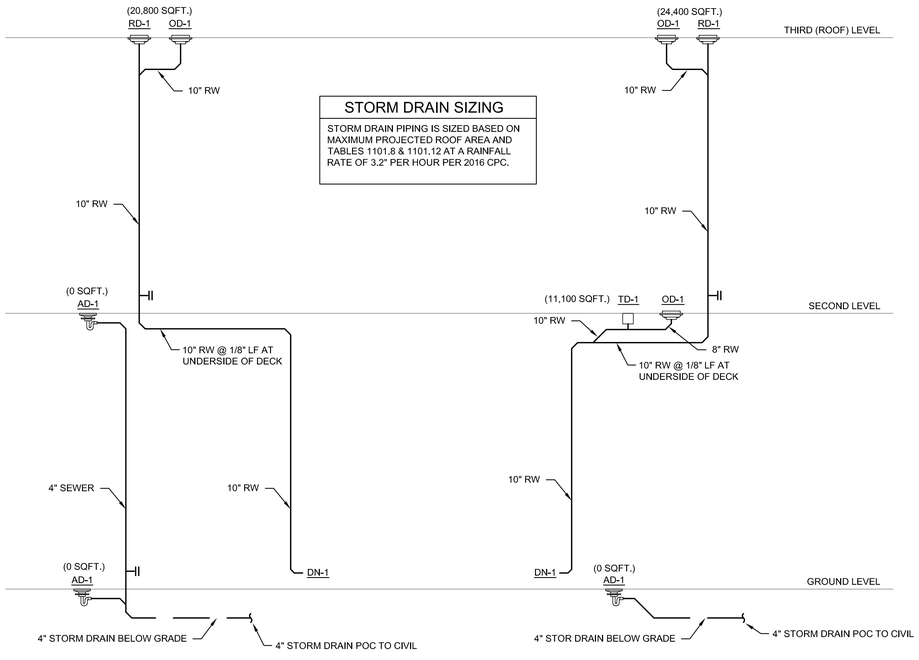

STORM DRAIN SIZING

STORM DRAIN PIPING IS SIZED BASED ON MAXIMUM PROJECTED ROOF AREA AND TABLES 1101.8 & 1101.12 AT A RAINFALL RATE OF 3.2" PER HOUR PER 2016 CPC.

DRAIN PIPING RISER DIAGRAM

SCALE: NONE

8

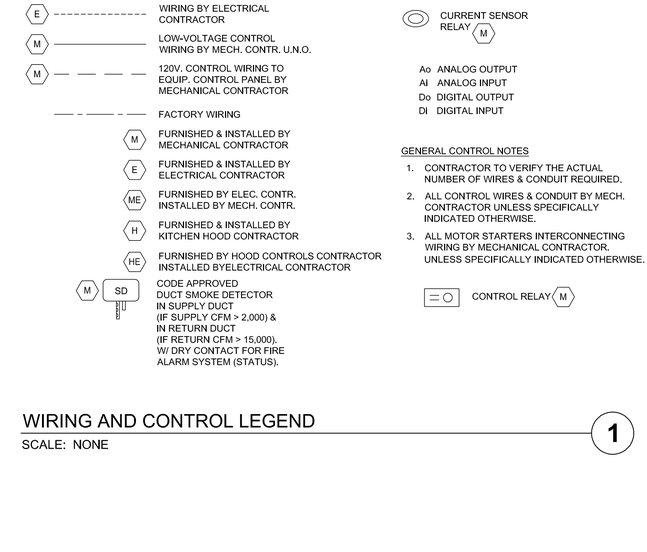

GENERAL CONTROL NOTES

1. CONTRACTOR TO VERIFY THE ACTUAL NUMBER OF WIRES & CONDUIT REQUIRED.
2. ALL CONTROL WIRES & CONDUIT BY MECH. CONTRACTOR UNLESS SPECIFICALLY INDICATED OTHERWISE.
3. ALL MOTOR STARTERS INTERCONNECTING WIRING BY MECHANICAL CONTRACTOR. UNLESS SPECIFICALLY INDICATED OTHERWISE.

CONTROL RELAY M

WIRING AND CONTROL LEGEND

SCALE: NONE

1

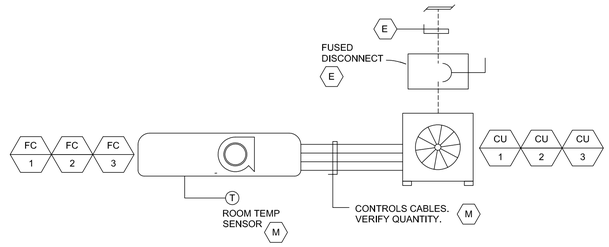

SPLIT SYSTEM WIRING & CONTROL DIAGRAM

SCALE: NONE

2

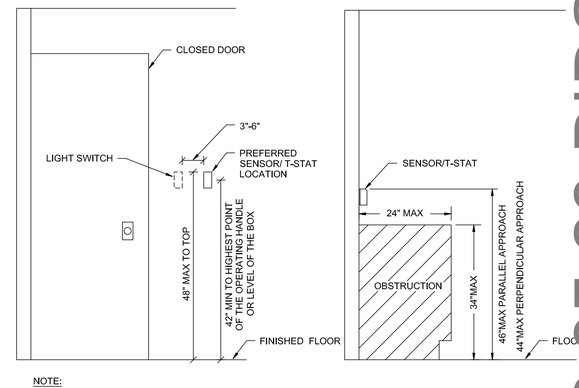

NOTE:
1. DO NOT INSTALL T-STATS ON EXTERIOR WALLS.
2. PROVIDE MINIMUM 30"x48" CLEAR FLOOR SPACE FOR PERPENDICULAR APPROACH AT EACH LOCATION.

THERMOSTAT/SENSOR HEIGHT & LOCATION

SCALE: NONE

3

CUNINGHAM GROUP

Cuningham Group Architecture, Inc.

1030 G Street
San Diego, CA 92101

Tel: 619 849 1080
Fax: 619 849 1089

www.cuningham.com

Consultant

Dufoe consulting engineers
San Diego | Temecula
9665 Chesapeake Dr., Suite 320 San Diego, CA 92123
858-368-8630 Fax 866-517-3293 www.dceinc.net

Revisions

No.	Date	Description

Document Phase:	Backcheck # 1
Date:	MAY 24th, 2018
PIC / AIC:	PS
Drawn By:	DL
Checked By:	TC
Comm. No.:	PR17-0311

Project Title

TCMC PARKING STRUCTURE AND MAIN ENTRY

Sheet Title

MECHANICAL PLUMBING DETAILS

Sheet Number

MP3.01

2018.05.29 BIDSET

Copyright © 2017 by Cuningham Group Architecture, Inc. (All Rights Reserved)

\\cgp\Data\Projects\170311\Central\PR170311_TCMC_Parking_Structure\Mep.rvt
10/4/2017 1:35:50 PM

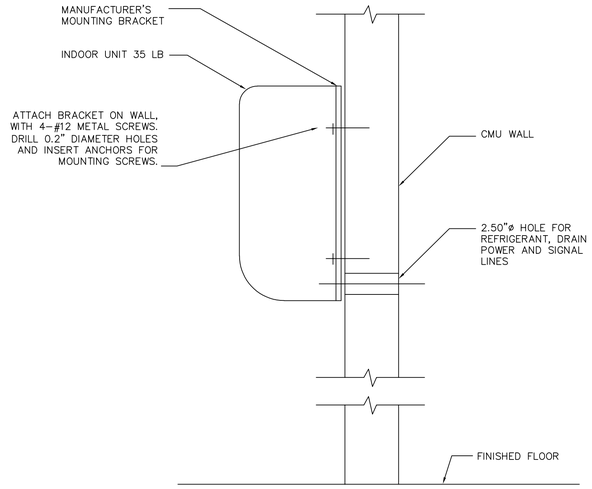

WALL MOUNTED COOLING ONLY SPLIT DX UNIT DETAIL — 3

SCALE: NONE

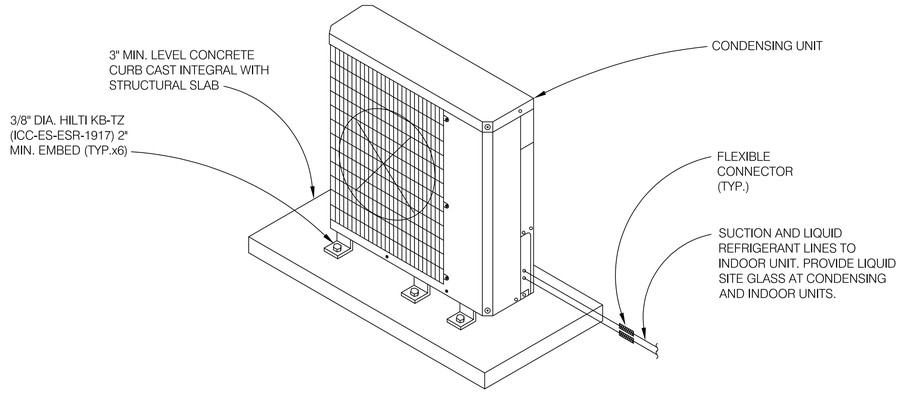

CONDENSING UNIT DETAIL — 4

SCALE: NONE

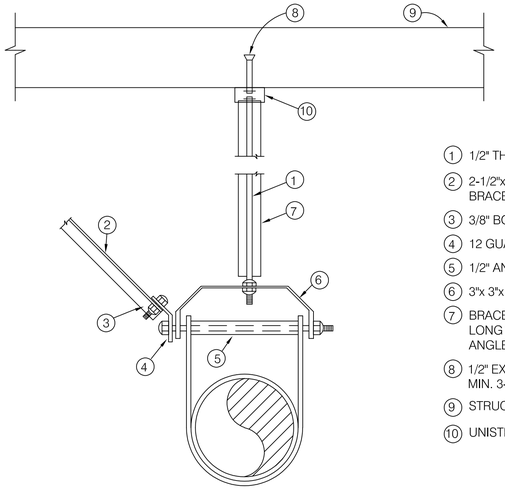

1. 1/2" THREADED ROD.
2. 2-1/2"x 2-1/2" 16 GUAGE TRANSVERSE ANGLE BRACE SLOPE 1:1
3. 3/8" BOLT WITH CUT WASHER
4. 12 GUAGE CLIP
5. 1/2" ANCHOR BOLT W/ PIPE SLEEVE.
6. 3"x 3"x 1/4" ANGLE CLIP
7. BRACE HANGER RODS OVER 25" LONG WITH 2"x 2"x 3/16" VERTICAL ANGLE BRACE.
8. 1/2" EXPANSION ANCHOR HILTI KB-TZ (ICC-ES ESR-1917) MIN. 3-1/4" EMBED.
9. STRUCTURE.
10. UNISTRUT P1000.

PIPE HANGER SUPPORT DETAIL — 5

SCALE: NONE

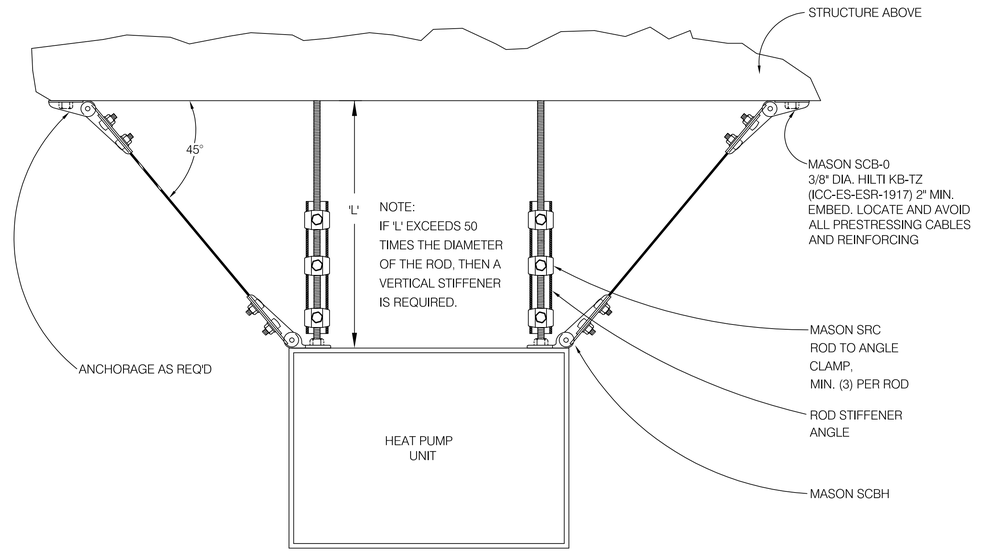

ELEVATION VIEW

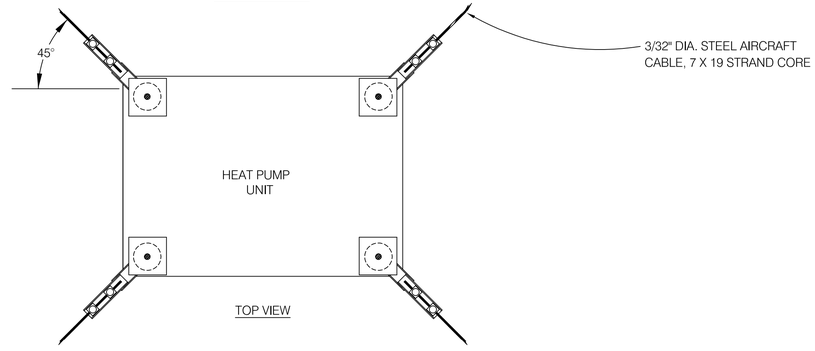

TOP VIEW

HORIZONTAL HEAT PUMP SUPPORT DETAIL — 1

SCALE: NONE

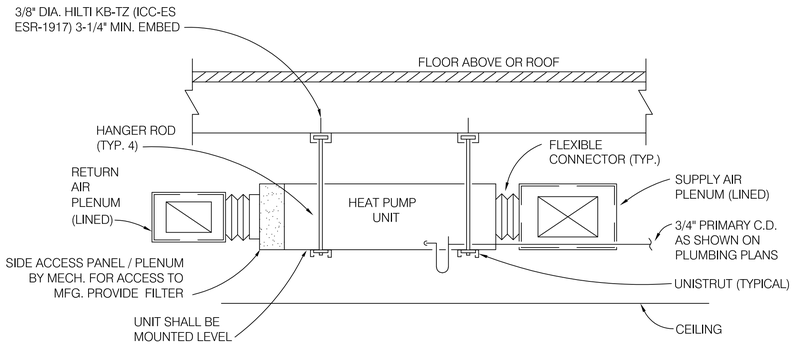

NOTE:

1. PROVIDE 304 S.S. SECONDARY CONDENSATE PAN. INSTALL WITH CONDENSATE DRAIN PAN RELAY FLOAT SWITCH TO SHUTDOWN UNIT WHEN PAN IS FULL.

HORIZONTAL HEAT PUMP UNIT DETAIL — 2

SCALE: NONE

Cuningham Group Architecture, Inc.

1030 G Street
San Diego, CA 92101

Tel: 619 849 1080
Fax: 619 849 1089

www.cuningham.com

Consultant

Dufoe consulting engineers
San Diego | Temecula
9665 Chesapeake Dr., Suite 320 San Diego, CA 92123
858-368-8630 Fax 866-517-3293 www.doeinc.net

Revisions

No.	Date	Description

2018.05.29 BIDSET

Document Phase:	Backcheck # 1
Date:	MAY 24th, 2018
PIC / AIC:	PS
Drawn By:	DL
Checked By:	TC
Comm. No.:	PR17-0311

Project Title

TCMC PARKING STRUCTURE AND MAIN ENTRY

Sheet Title

MECHANICAL PLUMBING DETAILS

Sheet Number

MP3.02

Copyright © 2017 by Cuningham Group Architecture, Inc. (All Rights Reserved)

\\cga\Data\Project\17\0311\AC\Arch\all\PR170311_TCMC_Parking_Structure\MEkg.rvt
10/4/2017 1:55:03 PM

LIGHTING CONTROLS SYMBOL LIST

SYMBOL	DESCRIPTION
$	SWITCH MOUNTED IN SURFACE BOX, +42" AFF UNLESS NOTED OTHERWISE.
$	SWITCH-RECESSED, +42" AFF UNLESS NOTED OTHERWISE.
$ a,b,c	SPST WALL SWITCH. LETTERS INDICATE THE NUMBER OF SWITCHES AND OUTLETS THEY CONTROL. MOUNTED FLUSH IN BOX AT +42" AFF U.O.N.
$ D	WALL BOX DIMMER, +42" AFF UNLESS NOTED OTHERWISE.
$ K	KEYED WALL SWITCH, +42" AFF UNLESS NOTED OTHERWISE.
$ M	MANUAL MOTOR STARTER, +42" AFF UNLESS NOTED OTHERWISE.
	PUSHBUTTON STATION.
	LOW VOLTAGE MANUAL PUSHBUTTON STATION ON/OFF CONTROL.
D	LOW VOLTAGE MANUAL PUSHBUTTON STATION DIMMING CONTROL.
	PHOTOCELL MOUNTED AS NOTED ON PLANS.
DS	DAYLIGHT SENSOR.
OC	CEILING INFRARED OCCUPANCY SENSOR.
OC ON	CEILING INFRARED OCCUPANCY SENSOR "PARTIAL ON".
OC OFF	CEILING INFRARED OCCUPANCY SENSOR "PARTIAL OFF".
OC DT	DUAL TECHNOLOGY OCCUPANCY SENSOR.
OC	SURFACE WALL SWITCH OCCUPANCY SENSOR.
OC a,b	RECESSED WALL OCCUPANCY SENSOR SWITCH WITH MANUAL ON/OFF CONTROLS, LETTERS INDICATE CONTROL GROUP.
OC D	RECESSED WALL OCCUPANCY SENSOR SWITCH WITH MANUAL ON/OFF AND DIMMING CONTROLS,
TC	TIME CLOCK.
RC	ROOM CONTROLLER / POWER PACK.
R	RELAY.
LCP	LIGHTING CONTROLS PANEL.

POWER SYMBOL LIST

SYMBOL	DESCRIPTION
	DUPLEX CONVENIENCE OUTLET MOUNTED IN FLUSH BOX AT +18" AFF UNLESS NOTED OTHERWISE.
	DUPLEX CONVENIENCE OUTLET MOUNTED IN SURFACE BOX AT +18" AFF UNLESS NOTED OTHERWISE.
	DOUBLE DUPLEX CONVENIENCE OUTLET, +18" AFF UNLESS NOTED OTHERWISE.
GFI	DUPLEX CONVENIENCE OUTLET MOUNTED W/INTEGRAL GROUND FAULT INTERRUPTER, +18" AFF UNLESS NOTED OTHERWISE.
WP	DUPLEX CONVENIENCE OUTLET WITH WEATHER PROOF COVER
	DUPLEX CONVENIENCE OUTLET MOUNTED ABOVE 18" AFF. COORDINATED WITH ARCHITEC INTERIOR ELEVATIONS.
	CONTROLLED DUPLEX CONVENIENCE OUTLET, +18" AFF UNLESS NOTED OTHERWISE.
	SURFACE MOUNTED BRANCH CIRCUIT PANELBOARD.
	DISTRIBUTION BOARD.
	DISTRIBUTION PANELBOARD.
	TERMINAL CABINET.
	GROUND ROD.
	GROUNDING BUS BAR W/MINIMUM #6 COPPER WIRE TO EQUIPMENT GROUND BUS.

SITE UTILITIES SYMBOL LIST

SYMBOL	DESCRIPTION
EH	ELECTRICAL HANDHOLE FLUSH IN GRADE.
TH	TELEPHONE SYSTEM HANDHOLE.
T	TRANSFORMER
PB	CONCRETE PULLBOX FLUSH IN GRADE, SIZE AS INDICATED ON PLANS.

SINGLE LINE SYSTEM SYMB LIST

SYMBOL	DESCRIPTION
KWH	KILOWATTHOUR METER WITH CT'S.
	CURRENT TRANSFORMER.
	FUSE.
	CIRCUIT BREAKER.
	SWITCH
	GROUND.
1	SHEET NOTE REFERENCE.
	MOTOR.
	FEEDER SIZE REFERENCE.
	TRANSFORMER.
ST	SHUNT TRIP BREAKER.
PANEL A	PANELBOARD.
PANEL A	PANELBOARD WITH DOUBLE LUG.

TELECOMMUNICATIONS SYMB LIST

SYMBOL	DESCRIPTION
	TELEPHONE OUTLET, +18" AFF UNLESS NOTED OTHERWISE.
W	WALL TELEPHONE OUTLET, +48" AFF UNLESS NOTED OTHERWISE.
	COMBINATION TELEPHONE AND DATA OUTLET, +18" AFF UNLESS NOTED OTHERWISE.
	TELEPHONE BACKBOARD, SIZE AS NOTED ON PLANS.

WIRING / EQUIP CONNECT SYMB LIST

SYMBOL	DESCRIPTION
J	CEILING MOUNTED JUNCTION BOX.
J	JUNCTION BOX, FLUSH MOUNTED AT +18" AFF UNLESS NOTED OTHERWISE.
J	JUNCTION BOX, SURFACE MOUNTED AT +18" AFF UNLESS NOTED OTHERWISE.
J	JUNCTION BOX WITH FLEXIBLE CONDUIT CONNECTION.
	BRANCH CIRCUIT CONDUIT, CONCEALED IN WALL OR CEILING.
	BRANCH CIRCUIT CONDUIT, CONCEALED IN FLOOR OR UNDERGROUND.
	BRANCH CIRCUIT CONDUIT, RUN EXPOSED.
	2# 12, 3/4"C. 5# 12, 3/4"C.
	3# 12, 3/4"C. 6# 12, 3/4"C.
	4# 12, 3/4"C. 7# 10, 3/4"C.
F	DISCONNECT SWITCH, "F" INDICATES FUSED TYPE, MOUNTED AT +54" AFF UNLESS NOTED OTHERWISE.
	COMBINATION MOTOR STARTER, MOUNTED AT +54" AFF UNLESS NOTED OTHERWISE.
E	EMERGENCY SYSTEM CONDUIT.
D	DATA SYSTEM CONDUIT.
G	BARE COPPER GROUND CONDUCTOR.
LV	LOW VOLTAGE CIRCUIT.
	CONDUIT RUN TURNED UP.
	CONDUIT RUN TURNED DOWN.
	CONDUIT RUN STUBBED OUT.
A-1	BRANCH CIRCUIT HOMERUN WITH PANEL AND CIRCUIT DESIGNATED.
XN	INDICATES NEW CONDUCTORS IN EXISTING CONDUIT.
	FLEXIBLE CONDUIT W/ POINT OF CONNECTION.
	POINT OF CONNECTION.
	CABLE TRAY/LADDER RACK.

ABBREVIATIONS

SUFFIX	DESCRIPTION
4S	4" SQUARE BY 2 1/8" DEEP BOX.
ADA	AMERICAN WITH DISABILITIES ACT.
AFF	ABOVE FINISH FLOOR.
AFG	ABOVE FINISH GRADE.
AWG	AMERICAN WIRE GAUGE.
AMP, A	AMPERE.
A.I.C.	AMPERES INTERRUPTING CAPACITY (SYMMETRICAL).
AF/AT	AMP FRAME, AMP TRIP.
ATS	AUTOMATIC TRANSFER SWITCH.
AUX	AUXILIARY CONTACTS.
BLDG	BUILDING.
CIRC., CKT.	CIRCUIT.
CB	CIRCUIT BREAKER.
C	CONDUIT.
C.O.	CONDUIT ONLY, COMPLETE WITH PULLSTRING.
CONN	CONNECTED.
CPT	CONTROL POWER TRANSFORMER.
DIA	DIAMETER.
DISC	DISCONNECT.
DIST	DISTRIBUTION.
E.C.	ELECTRICAL CONTRACTOR.
EMS	ENERGY MANAGEMENT CONTROL SYSTEM.
EMT	ELECTRICAL METALLIC TUBING.
E.P.O.	EMERGENCY POWER OFF.
EF	EXHAUST FAN.
FT or '	FEET.
FA	FIRE ALARM.
FLA	FULL LOAD AMPS.
GRND	GROUND.
GFCI	GROUND FAULT CIRCUIT INTERRUPTER.
HVAC	HEATING, VENTILATING AND AIR CONDITIONING.
H.,W.,D.,L.	HEIGHT, WIDTH, DEPTH, LENGTH.
HP	HORSEPOWER.
IN. or "	INCHES.
JBOX	JUNCTION BOX.
K	DEGREE KELVIN.
KAIC	KILOVOLT AMPERES AVAILABLE INRUSH CURRENT.
KVA	KILOVOLT AMPERES.
KW	KILOWATT.
KWH	KILOWATT HOUR.
L.F.	LINEAR FEET.
LTG, LTS	LIGHTING.
MAX.	MAXIMUM.
MOCP	MAXIMUM OVERCURRENT PROTECTION.
MCB	MAIN CIRCUIT BREAKER.
MLO	MAIN LUGS ONLY.
M	METER.
M/M	METER MAIN.
MIN.	MINIMUM.
MCA	MINIMUM CIRCUIT AMPS.
KCMIL	THOUSAND CIRCULAR MILS.
MFR.	MANUFACTURER.
MTD	MOUNTED.
NEC	NATIONAL ELECTRICAL CODE.
NEMA	NATIONAL ELECTRICAL MANUFACTURER'S ASSOCIATION.
NO. or #	NUMBER.
PH. or ~	PHASE.
P	POLE.
PVC	POLY VINYL CHLORIDE.
PROVIDE	FURNISH, INSTALL AND CONNECT.
REC, RECEPT	RECEPTACLE.
RGS	RIGID GALVANIZED STEEL.
SQ.	SQUARE.
ST	SHUNT TRIP.
TYP	TYPICAL.
U.G.P.S.	UNDERGROUND PULL SECTION.
U.O.N.	UNLESS OTHERWISE NOTED.
V	VOLTS.
VA	VOLT AMPERES.
WP	WEATHERPROOF.
W	WIRE.
XFMR	TRANSFORMER.
X	INDICATES EXISTING TO REMAIN.
XR	INDICATES EXISTING TO BE REMOVED.
XL	INDICATES EXISTING TO BE RELOCATED.
XN	INDICATES NEW LOCATION OF RELOCATED EQUIPMENT.

MECHANICAL EQUIPMENT CONNECTION SCHEDULE

CALLOUT	DESCRIPTION	VOLTAGE/PHASE	HP	FLA	MCA	MOCP	BREAKER	CONDUCTOR SIZE	BRANCH CIRCUIT	NOTES
CU-1	CONDENSING UNIT STORAGE ROOM	208V 2P 2W		5.25	9	15	15/2	3/4"C,2#10,#12G	P1-1,3	
CU-2	CONDENSING UNIT ELECTRICAL ROOM	208V 2P 2W		14	20	30	30/2	3/4"C,2#12,#12G	P1-5,7	
CU-3	CONDENSING UNIT MACHINE ROOM	208V 2P 2W		12.3	18	25	25/2	3/4"C,2#10,#10G	P1-2,4	
FC-1	FAN COIL STORAGE ROOM	208V 2P 2W					15/2	3/4"C,2#10,#12G	P1-1,3	POWER DERIVED VIA ASSOCIATED CONDENSING UNIT
FC-2	FAN COIL ELECTRICAL ROOM	208V 2P 2W					30/2	3/4"C,2#12,#12G	P1-5,7	POWER DERIVED VIA ASSOCIATED CONDENSING UNIT
FC-3	FAN COIL MACHINE ROOM	208V 2P 2W					25/2	3/4"C,2#10,#10G	P1-2,4	POWER DERIVED VIA ASSOCIATED CONDENSING UNIT

LUMINAIRE SCHEDULE

CALLOUT	SYMBOL	LAMP	DESCRIPTION	BALLAST/DRIVER	MOUNTING	MODEL	INPUT VA	VOLTS	NOTES
A		LED 3000K	15000 LUMEN LED POLE MOUNTED SITE AREA	ELECTRONIC	POLE	LITHONIA LIGHTING - DSX1 LED P5 30K T3M MVOLT RPA PIRH1FC3V	138	277	PROVIDE 7" DIA ROUND TAMPERED ALUMINUM POLE - DARK BRONZE. HEIGHT 22'-0" MOUNTED ON 3'-0" BASE.
B		LED 3000K	14000 LUMEN LED POLE MOUNTED SITE AREA	ELECTRONIC	POLE	LITHONIA LIGHTING - DSX1 LED P5 30K T4M MVOLT RPA PIRH1FC3V	138	277	PROVIDE 7" DIA ROUND TAMPERED ALUMINUM POLE - DARK BRONZE. HEIGHT 22'-0" MOUNTED ON 3'-0" BASE.
C		LED 3000K	9000 LUMEN LED POLE MOUNTED SITE AREA	ELECTRONIC	POLE	LITHONIA LIGHTING - DSX1 LED P2 40K T5W MVOLT RPA	70	277	PROVIDE 7" DIA ROUND TAMPERED ALUMINUM POLE - DARK BRONZE. HEIGHT 22'-0" MOUNTED ON 3'-0" BASE.
CE		LED 3000K	9000 LUMEN LED POLE MOUNTED SITE AREA	ELECTRONIC	POLE	LITHONIA LIGHTING - DSX1 LED P2 40K T5W MVOLT RPA	70	277	SAME AS "C". PROVIDE CONNECTION TO EMERGENCY LIGHTING INVERTER.
D		LED 4000K	9,000 LUMEN LED SURFACE MOUNTED LIGHT	ELECTRONIC	SURFACE	LITHONIA LIGHTING - DSXSC LED 30C 700 40K T5M MVOLT XAD PIR	67	277	
DE		LED 4000K	9,000 LUMEN LED SURFACE MOUNTED LIGHT	ELECTRONIC	SURFACE	LITHONIA LIGHTING - DSXSC LED 30C 700 40K T5M MVOLT XAD PIR	67	277	PROVIDE CONNECTION TO EMERGENCY LIGHTING INVERTER.
E		LED 4000K	14,000 LUMEN LED SURFACE MOUNTED LIGHT	ELECTRONIC	SURFACE	LITHONIA LIGHTING - DSXSC LED 30C 1000 40K T5E MVOLT XAD PIR	107	277	
EE		LED 4000K	14,000 LUMEN LED SURFACE MOUNTED LIGHT	ELECTRONIC	SURFACE	LITHONIA LIGHTING - DSXSC LED 30C 1000 40K T5E MVOLT XAD PIR	107	277	PROVIDE CONNECTION EMERGENGY LIGHTING INVERTER.
F		LED 4000K	LED 8000 LUMEN PENDANT MOUNTED STRIPLIGHT	ELECTRONIC	PENDANT	LITHONIA LIGHTING - FEM L48 8000LM LPACL MVOLT 35K 80CRI	67	277	
FE		LED 4000K	LED 8000 LUMEN PENDANT MOUNTED STRIPLIGHT	ELECTRONIC	PENDANT	LITHONIA LIGHTING - FEM L48 8000LM LPACL MVOLT 35K 80CRI	67	277	PROVIDE CONNECTION TO EMERGENCY LIGHTING INVERTER.
G		LED 3500K	3000 LUMEN LED PENDANT STRIPLIGHT	ELECTRONIC	PENDANT	LITHONIA LIGHTING - ZL1N L48 3000LM L/LENS MVOLT 35K 80CRI	25	277	
GE		LED 3500K	3000 LUMEN LED PENDANT STRIPLIGHT	ELECTRONIC	PENDANT	LITHONIA LIGHTING - ZL1N L48 3000LM L/LENS MVOLT 35K 80CRI	25	277	PROVIDE CONNECTION TO EMERGENCY LIGHTING INVERTER.
H		LED 4000K	LED 7000 LUMEN AREA POLE MOUNTED	ELECTRONIC	POLE	LITHONIA LIGHTING - MRP 42C 530 40K SR5 MVOLT	75	277	PROVIDE 4" DIA ROUND POLE - DARK BRONZE. HEIGHT 12'-0".
HE		LED 4000K	LED 7000 LUMEN AREA POLE MOUNTED	ELECTRONIC	POLE	LITHONIA LIGHTING - MRP 42C 530 40K SR5 MVOLT	75	277	PROVIDE 4" DIA ROUND POLE - DARK BRONZE. HEIGHT 12'-0". PROVIDE CONNECTION TO EMERGENCY LIGHTING INVERTER.
JE		LED 4000K	4000 LUMENS LED WALL MOUNTED LIGHT	ELECTRONIC	WALL	LITHONIA LIGHTING - OLWX1 LED 40W 40K	40	277	PROVIDE CONNECTION TO EMERGENCY INVERTER.
X1		LED	CEILING MOUNTED LED ILLUMINATED EXIT SIGN	ELECTRONIC	PENDANT	LITHONIA LIGHTING - EXR LED M6	0.8	277	PROVIDE CONNECTION TO EMERGENCY LIGHTING INVERTER.
X2		LED	CEILING MOUNTED LED 2 SIDE ILLUMINATED EXIT SIGN	ELECTRONIC	WALL	LITHONIA LIGHTING - EXR LED M6	0.8	277	PROVIDE CONNECTION TO EMERGENCY LIGHTING INVERTER.
X3		LED	SURFACE MOUNTED LED ILLUMINATED EXIT SIGN	ELECTRONIC	POLE	LITHONIA LIGHTING - EXR LED M6	0.8	277	PROVIDE CONNECTION TO EMERGENCY LIGHTING INVERTER.

SHEET INDEX

SHEET NUMBER	SHEET TITLE
E0.1	ELECTRICAL SYMBOLS & ABBREVIATIONS
E1.1	TITLE 24 DOCUMENTATION
E1.2	TITLE 24 DOCUMENTATION
E1.3	TITLE 24 DOCUMENTATION
E2.1	SINGLE DIAGRAM & PANEL SCHEDULES
E2.2	LIGHTING CONTROLS DIAGRAM
E3.0	ELECTRICAL DEMOLITION SITE PLAN
E3.1	ELECTRICAL SITE PLAN
E4.1	GROUND FLOOR LIGHTING PLAN
E4.2	2ND FLOOR LIGHTING PLAN
E4.3	ROOF LIGHTING PLAN
E5.1	GROUND FLOOR POWER & SIGNAL PLAN
E5.2	2ND FLOOR POWER & SIGNAL PLAN
E5.3	ROOF POWER & SIGNAL PLAN
E5.4	ELECTRICAL ENLARGED PLANS
E6.1	ELECTRICAL DETAILS
E7.1	GROUND FLOOR PHOTOMETRIC PLAN
E7.2	GROUND FLOOR PHOTOMETRIC EGRESS PLAN
E7.3	2ND FLOOR PHOTOMETRIC PLAN
E7.4	2ND FLOOR PHOTOMETRIC EGRESS PLAN
E7.5	ROOF PHOTOMETRIC PLAN
E7.6	ROOF PHOTOMETRIC EGRESS PLAN
E7.7	SITE PHOTOMETRIC PLAN

2018.05.29 BIDSET

CUNINGHAM GROUP

Cuningham Group Architecture, Inc.

1030 G Street
San Diego, CA 92101

Tel: 619 849 1080
Fax: 619 849 1089

www.cuningham.com

Consultant

RANDALL LAMB
4757 Palm Avenue
La Mesa, CA 91942
(619) 713-5700

Revisions

No.	Date	Description

REGISTERED PROFESSIONAL ENGINEER
KURT R. KOHLER
NO. 10987
ELECTRICAL
STATE OF CALIFORNIA

1/11/2018
RL #SD17238.00

Document Phase:	Backcheck # 1
Date:	MAY 24th, 2018
PIC / AIC:	-
Drawn By:	-
Checked By:	-
Comm. No.:	PR17-0311

Project Title

TCMC PARKING STRUCTURE AND MAIN ENTRY

Sheet Title

ELECTRICAL SYMBOLS & ABBREVIATIONS

Sheet Number

E0.1

Copyright © 2017 by Cuningham Group Architecture, Inc. (All Rights Reserved)

STATE OF CALIFORNIA
Electrical Power Distribution
NRCC-ELC-E (Created 12/17) CALIFORNIA ENERGY COMMISSION

CERTIFICATE OF COMPLIANCE	NRCC-ELC-E
This document is used to demonstrate compliance with mandatory requirements in §130.5 for electrical systems in newly constructed nonresidential, high-rise residential and hotel/motel occupancies. Additions and alterations to electrical service systems in these occupancies will also use this document to demonstrate compliance per §141.0(a) or §141.0(b)2F for alterations.	
Project Name: TCMC Parking Structure	Report Page: Page 1 of 5
Project Address: 4002 Vista Way, Oceanside, CA 92056	Date Prepared: 05/17/2018

A. GENERAL INFORMATION

01 Project Location (city)	Oceanside	02 Occupancy Types Within Project:				
☐ Office	☐ Retail	☐ Warehouse	☐ Hotel/ Motel	☐ School	☐ Support Areas	
☑ Parking Garage	☐ High-Rise Residential	☐ Relocatable	☐ Other (Write In):			

B. PROJECT SCOPE

Table Instructions: Include any electrical service systems that are within the scope of the permit application.

01 Electrical Service Designation/ Description	02 Scope of Work	03 Rating (kVA)	04 Utility Provided Metering System Exception to §130.5(a)[1]	05 Demand Response Controls
SDG&E, Switchboard MSB	New electrical service equipment & meter	500	☐	Where required, demand response controls must be specified which are capable of receiving and automatically responding to at least one standards based messaging protocol which enables demand response after receiving a demand response signal. Sections §120.2, §130.1 and §130.3 and compliance documents NRCC-MCH, NRCC-LTI and NRCC-LTS will indicate when demand response controls are required.

[1] *FOOTNOTES: Applicable if the utility company is providing a metering system that indicates instantaneous kW demand and kWh for a utility-defined period.*

C. COMPLIANCE RESULTS

Table Instructions: If this table says "DOES NOT COMPLY" refer to Table D. for guidance and review the Table that indicates "No".

01 Service Electrical Metering §130.5(a)		02 Separation for Monitoring §130.5(b)		03 Voltage Drop §130.5(c)		04 Controlled Receptacles §130.5(d)	05
(See Table F)		(See Table G)		(See Table H)		(See Table I)	
Yes	AND	Yes	AND	Yes	AND	Yes	**COMPLIES**

STATE OF CALIFORNIA
Electrical Power Distribution
NRCC-ELC-E (Created 12/17) CALIFORNIA ENERGY COMMISSION

CERTIFICATE OF COMPLIANCE	NRCC-ELC-E
Project Name: TCMC Parking Structure	Report Page: Page 2 of 5
Project Address: 4002 Vista Way, Oceanside, CA 92056	Date Prepared: 05/17/2018

D. EXCEPTIONAL CONDITIONS

This table is auto-filled with uneditable comments because of selections made or data entered in tables throughout the form.

No exceptional conditions apply to this project.

E. ADDITIONAL REMARKS

This table includes remarks made by the permit applicant to the Authority Having Jurisdiction.

F. SERVICE ELECTRICAL METERING

Table Instructions: Complete the table below for new or replacement electrical service systems OR equipment to demonstrate compliance with §130.5(a).

01 Electrical Service Designation/ Description	02 Rating (kVA)	03 Required Metering Capabilities per Table 130.5-A: Instantaneous Demand (kW)	Historical Peak Demand (kW)	Tracking kWh for user-defined period	kWh per rate period	04 Location of Requirements in Construction Documents	05 Field Inspector: Pass	Fail
SDG&E, Switchboard MSB	500	☑	☑	☑	☐	E2.1, E5.4	☐	☐

G. SEPARATION OF ELECTRICAL CIRCUITS FOR ENERGY MONITORING

Table Instructions: Complete this table for entirely new or complete replacement electrical power distribution systems to demonstrate compliance with §130.5(b). Using the dropdown choices in column 01, indicate the load types included for each service. Any load types that are not included in the service do not need to be shown.

Electrical Service Designation/Description: SDG&E, Switchboard MSB

01 Load Type per Table 130.5-B[1]	02 Minimum Required Separation of Load per Table 130.5-B	03 Compliance Method[2]	04 Location of Requirements in Construction Documents	05 Field Inspector: Pass	Fail
Lighting including exit, egress and exterior	All lighting disaggregated by floor, type or area	Method 1	E2.1, E3.1, E4.1, E4.2, E4.3, E5.4	☐	☐
HVAC systems and components	All HVAC in aggregate and each HVAC load rated at least 50 kVA	Method 2	E2.1, E5.1, E5.2, E5.3, E5.4	☐	☐

Table Continued

STATE OF CALIFORNIA
Electrical Power Distribution
NRCC-ELC-E (Created 12/17) CALIFORNIA ENERGY COMMISSION

CERTIFICATE OF COMPLIANCE	NRCC-ELC-E
Project Name: TCMC Parking Structure	Report Page: Page 3 of 5
Project Address: 4002 Vista Way, Oceanside, CA 92056	Date Prepared: 05/17/2018

01 Load Type per Table 130.5-B[1]	02 Minimum Required Separation of Load per Table 130.5-B	03 Compliance Method[2]	04 Location of Requirements in Construction Documents	05 Field Inspector: Pass	Fail
Plug Loads and appliances < 25kVA	All plug load separated by floor, type or area Groups of plug loads exceeding 25 kVA connected load in an area less than 5000 sf	Method 2	E2.1, E5.1, E5.2, E5.3, E5.4	☐	☐
Elevators, escalators, moving walkways	All loads in aggregate	Method 1	E2.1, E5.4	☐	☐

** NOTES: If "Other*" is selected under Compliance Method above, please indicate how compliance has been achieved in the space provided below.*

[1] *FOOTNOTES: For each separate load type, up to 10% of the connected load may be of any type.*
[2] *Method 1: Switchboards/ motor control centers/ panelboard loads disaggregated for each load type*
Method 2: Switchboards/ motor control centers/ panelboard supply other distribution equipment with loads disaggregated for each load type
Method 3: Complete metering system measures and reports loads by type
See Chapter 8 of the Nonresidential Compliance Manual for more detail on Compliance Methods.

H. VOLTAGE DROP

Table Instructions: Please complete this table for entirely new or complete replacement electrical power distribution systems, or alterations that add, modify or replace both feeders and branch circuits to demonstrate compliance with §130.5(c). For alterations, only the altered circuits must demonstrate compliance per §141.0(b)2Pii.

01 Electrical Service Designation/ Description	02 Combined Voltage Drop on Installed Feeder/Branch Circuit Conductors Compliance Method		03 Location of Voltage Drop Calculations[1]	04 Sheet Number for Voltage Drop Calculations in Construction Documents	05 Field Inspector: Pass	Fail
SDG&E, Switchboard MSB	☑ Voltage drop < 5%	☐ Permitted by CA Elec Code (Exception to §130.5(c))*	In construction documents	E2.1, E5.4	☐	☐

**NOTES If "Permitted by CA Elec Code*" is selected under Compliance Method above, please indicate where the exception applies in the space provided below.*

[1] *FOOTNOTES: Voltage drop calculations may be attached to the permit application outside the construction documents if allowed by the Authority Having Jurisdiction. Select "attached" if applicable. If calculations will be the responsibility of the installing contractor, select "Contractor Responsible".*

I. CIRCUIT CONTROLS FOR 120-VOLT RECEPTACLES AND CONTROLLED RECEPTACLES

STATE OF CALIFORNIA
Electrical Power Distribution
NRCC-ELC-E (Created 12/17) CALIFORNIA ENERGY COMMISSION

CERTIFICATE OF COMPLIANCE	NRCC-ELC-E
Project Name: TCMC Parking Structure	Report Page: Page 4 of 5
Project Address: 4002 Vista Way, Oceanside, CA 92056	Date Prepared: 05/17/2018

Table Instructions: Please complete this table for entirely new or complete replacement electrical power distribution systems to demonstrate compliance with §130.5(d). Both controlled and uncontrolled receptacles must be provided in office areas, lobbies, conference rooms, kitchen areas in office spaces, copy rooms and hotel/motel guest rooms.

01 Electrical Service Designation/ Description	02 Location/ Type of Controlled Receptacles	03 Shut-Off Controls	04 Permanent Durable Marking Will be Used	05 Location of Requirements in Construction Documents	06 Field Inspector: Pass	Fail
SDG&E Service, Electrical Room, M4	NA: No applicable space types		☐		☐	☐

Add Row | Remove Last

** If "Other*" is selected under Compliance Method above, please indicate how compliance has been achieved in the space provided below.*

J. DECLARATION OF REQUIRED CERTIFICATES OF INSTALLATION

Table Instructions: Selections have been made based on information provided in previous tables of this document. If any selection needs to be changed, please explain why in Table E. Additional Remarks. These documents must be provided to the building inspector during construction and can be found online at http://www.energy.ca.gov/2015publications/CEC-400-2015-033/appendices/forms/NRCI

YES	NO	Form/Title	Field Inspector: Pass	Fail
◉	○	NRCI-ELC-01-E - Must be submitted for all buildings.	☐	☐

K. DECLARATION OF REQUIRED CERTIFICATES OF ACCEPTANCE

There are no Certificates of Acceptance applicable to electrical power distribution requirements.

STATE OF CALIFORNIA
Electrical Power Distribution
NRCC-ELC-E (Created 12/17) CALIFORNIA ENERGY COMMISSION

CERTIFICATE OF COMPLIANCE	NRCC-ELC-E
Project Name: TCMC Parking Structure	Report Page: Page 5 of 5
Project Address: 4002 Vista Way, Oceanside, CA 92056	Date Prepared: 05/17/2018

DOCUMENTATION AUTHOR'S DECLARATION STATEMENT

Documentation Author Name:	Kurt Kohler	Documentation Author Signature:	
Company:	Randall Lamb	Signature Date:	05/17/2018
Address:	4757 Palm Ave	CEA/ HERS Certification Identification (if applicable):	
City/State/Zip:	La Mesa/CA/91942	Phone:	619-713-5700

RESPONSIBLE PERSON'S DECLARATION STATEMENT

I certify the following under penalty of perjury, under the laws of the State of California:

1. **The information provided on this Certificate of Compliance is true and correct.**
2. **I am eligible under Division 3 of the Business and Professions Code to accept responsibility for the building design or system design identified on this Certificate of Compliance (responsible designer)**
3. **The energy features and performance specifications, materials, components, and manufactured devices for the building design or system design identified on this Certificate of Compliance conform to the requirements of Title 24, Part 1 and Part 6 of the California Code of Regulations.**
4. **The building design features or system design features identified on this Certificate of Compliance are consistent with the information provided on other applicable compliance documents, worksheets, calculations, plans and specifications submitted to the enforcement agency for approval with this building permit application.**
5. **I will ensure that a completed signed copy of this Certificate of Compliance shall be made available with the building permit(s) issued for the building, and made available to the enforcement agency for all applicable inspections. I understand that a completed signed copy of this Certificate of Compliance is required to be included with the documentation the builder provides to the building owner at occupancy.**

Responsible Designer Name:	Kurt Kholer	Responsible Designer Signature:	
Company :	Randall Lamb	Date Signed:	05/17/2018
Address:	4757 Palm Ave	License:	10987
City/State/Zip:	La Mesa/CA/91942	Phone:	619-713-5700

STATE OF CALIFORNIA
Indoor Lighting
NRCC-LTI-E (Created 3/18) CALIFORNIA ENERGY COMMISSION

CERTIFICATE OF COMPLIANCE	NRCC-LTI-E
This document is used to demonstrate compliance with requirements in §110.9, §130.0, §130.1, §140.6, and §141.0(b)2 for indoor lighting scopes using the prescriptive path.	
Project Name: TCMC Parking Structure and Main Entry	Report Page: Page 1 of 7
Project Address: 4002 Vista Way, Oceanside, CA 92056	Date Prepared: 05/17/2018

A. GENERAL INFORMATION

01 Project Location (city)	Oceanside	04 Total Conditioned Floor Area (ft²)	
02 Climate Zone	7	05 Total Unconditioned Floor Area (ft²)	99,695
03 Occupancy Types Within Project (select all that apply):		06 # of Stories (Habitable Above Grade)	

☐ Office ☐ Retail ☐ Warehouse ☐ Hotel/Motel ☐ School ☐ Support Areas
☑ Parking Garage ☐ High-Rise Residential ☐ Relocatable ☐ Other (write in):

B. PROJECT SCOPE

Table Instructions: Include any lighting systems that are within the scope of the permit application and are demonstrating compliance using the prescriptive path outlined in §140.6 or §141.0(b)2 for alterations. WARNING: Changing the Calculation Method in this table will result in the deletion of data previously input. If you need to change the calculation method, please open a new form or use "Save As".

Scope of Work	Conditioned Spaces		Unconditioned Spaces	
01	02	03	04	05
My Project Consists of (check all that apply):	Calculation Method	Area (ft²)	Calculation Method	Area (ft²)
☐ New Lighting System				
☑ New Lighting System- Parking Garage			Complete Building	99,695
☐ Altered Lighting System				
Total Area of Work (ft²)			**99,695**	

C. COMPLIANCE RESULTS

Table Instructions: If any cell on this table says "DOES NOT COMPLY" or "COMPLIES with Exceptional Conditions" refer to Table D. for guidance.

Lighting in conditioned and unconditioned spaces must not be combined per §140.6(b)1.	Allowed Lighting Power per §140.6(b) (Watts)						Actual Lighting Power per §140.6(a) (Watts)					Compliance Results
	01 Complete Building §140.6(c)1	02 Area Category §140.6(c)2	03 Area Category Footnotes §140.6(c)2G (+)	04 Tailored §140.6(c)3 (+)	=	05 **Total Allowed** (Watts)	≥ 06 Total Designed (Watts)	Adjustments: 07 Portable Lighting §140.6(a) (-)	08 PAF Control Credits §140.6(a)2 (-)	=	09 **Total Actual** (Watts) *Includes Adjustments	10 **05 Must be ≥ 09** §140.6
	(See Table I)	(See Table I)	(See Table K)	(See Table L)			(See Table F)	(See Table J)	(See Table R)			

Table Continued

CUNINGHAM GROUP

Cuningham Group Architecture, Inc.
1030 G Street
San Diego, CA 92101
Tel: 619 849 1080
Fax: 619 849 1089
www.cuningham.com

Consultant

RANDALL LAMB
4757 Palm Avenue
La Mesa, CA 91942
(619) 713-5700

Revisions

No.	Date	Description

REGISTERED PROFESSIONAL ENGINEER — KURT KOHLER — No. 10987 — ELECTRICAL — STATE OF CALIFORNIA

1/11/2018
RL #SD17238.00

Document Phase:	Backcheck 1
Date:	MAY 24th, 2018
PIC / AIC:	-
Drawn By:	-
Checked By:	-
Comm. No.:	-

Project Title

TCMC PARKING STRUCTURE AND MAIN ENTRY

Sheet Title

TITLE 24 DOCUMENTATION

Sheet Number

E1.1

2018.05.29 BIDSET

Copyright © 2017 by Cuningham Group Architecture, Inc. (All Rights Reserved)

STATE OF CALIFORNIA
Indoor Lighting
NRCC-LTI-E (Created 3/18) CALIFORNIA ENERGY COMMISSION

CERTIFICATE OF COMPLIANCE		NRCC-LTI-E
Project Name: TCMC Parking Structure and Main Entry	Report Page:	Page 2 of 7
Project Address: 4002 Vista Way, Oceanside, CA 92056	Date Prepared:	05/17/2018

Lighting in conditioned and unconditioned spaces must not be combined for compliance per §140.6(b)1.	Allowed Lighting Power per §140.6(b) (Watts)						Actual Lighting Power per §140.6(a) (Watts)					Compliance Results
	01	02	03	04	05		06	07	08	09		10
	Complete Building §140.6(c)1	Area Category §140.6(c)2	Area Category Footnotes §140.6(c)2G (+)	Tailored §140.6(c)3 (+)	Total Allowed (Watts)	≥	Total Designed (Watts)	Adjustments: Portable Lighting §140.6(a) (-)	Adjustments: PAF Control Credits §140.6(a)2 (-)	Total Actual (Watts) *Includes Adjustments		05 Must be ≥ 09 §140.6
	(See Table I)	(See Table I)	(See Table K)	(See Table L)			(See Table F)	(See Table J)	(See Table R)			
Conditioned:					=	≥			0	=		
Unconditioned:	19,939				= **19,939**	≥	8,787			= **8,787**		**COMPLIES**
Controls Compliance (See Table H for Details)												**COMPLIES with Exceptional Conditions**
Rated Power Reduction Compliance (See Table S for Details)												**Not Applicable**

D. EXCEPTIONAL CONDITIONS

This table is auto-filled with uneditable comments because of selections made or data entered in tables throughout the form.

Table H. Indoor Lighting Controls Permit Applicant Notes:
Parking Garage: Parking Garage: Multi Level: Exempt because lighting load is less than 0.5W per sq.ft.

E. ADDITIONAL REMARKS

This table includes remarks made by the permit applicant to the Authority Having Jurisdiction.

F. INDOOR LIGHTING FIXTURE SCHEDULE

Table Instructions: Include all permanent designed lighting and all portable lighting in offices.

Designed Wattage: Conditioned Spaces

Designed Wattage: Unconditioned Spaces

01	02	03		04	05	06	07	08	09	
Name or Item Tag	Complete Luminaire Description	Specialized Luminaire Types: Track	Specialized Luminaire Types: Portable	Watts per luminaire[1]	How Wattage is determined	Total number luminaires	Exempt per §140.6(a)3	Design Watts	Field Inspector: Pass	Field Inspector: Fail
D	LED Surface Canopy Light	☐	☐	67	Mfr. Spec[1]	93	☐	6,231	☐	☐
E	LED Surface Canopy Light	☐	☐	12	Mfr. Spec[1]	107	☐	1,284	☐	☐

Table Continued

STATE OF CALIFORNIA
Indoor Lighting
NRCC-LTI-E (Created 3/18) CALIFORNIA ENERGY COMMISSION

CERTIFICATE OF COMPLIANCE		NRCC-LTI-E
Project Name: TCMC Parking Structure and Main Entry	Report Page:	Page 3 of 7
Project Address: 4002 Vista Way, Oceanside, CA 92056	Date Prepared:	05/17/2018

01	02	03		04	05	06	07	08	09	
Name or Item Tag	Complete Luminaire Description	Specialized Luminaire Types: Track	Specialized Luminaire Types: Portable	Watts per luminaire[1]	How Wattage is determined	Total number luminaires	Exempt per §140.6(a)3	Design Watts	Field Inspector: Pass	Field Inspector: Fail
F	LED Industrial Linear	☐	☐	67	Mfr. Spec[1]	16	☐	1,072	☐	☐
G	LED Strip Light	☐	☐	25	Mfr. Spec[1]	8	☐	200	☐	☐
					Total Designed Watts UNCONDITIONED SPACES:			**8,787**		

[1]*NOTES: Authority Having Jurisdiction may ask for Luminaire cut sheets to confirm wattage used for compliance per §130.0(c) Wattage used must be the maximum rated for the luminaire, not the lamp.*

G. TRACK LIGHTING

This Section Does Not Apply

H. INDOOR LIGHTING CONTROLS (Not Including PAFs)

Table Instructions:
*Please include lighting controls for conditioned and unconditioned spaces in this table. When an option having a * is selected, the notes section of this table must be completed. The lighting controls section of the Compliance Summary Table on the first page will show "DOES NOT COMPLY" if the notes are left blank.*

Building Level Controls

01	02	03	
Mandatory Demand Response §130.1(e)	Shut-off Controls §130.1(c)	Field Inspector: Pass	Field Inspector: Fail
Not Required- Building ≤ 0.5 W/SF	See Area Level Controls	☐	☐

Area Level Controls

04	05	06	07	08	09	10	11	12	
Area Description	Complete Building or Area Category Primary Function Area	Area Controls §130.1(a)	Multi-Level Controls §130.1(b)	Shut-Off Controls §130.1(c)	Primary/Skylit Daylighting §130.1(d)	Secondary Daylighting §140.6(d)	Interlocked Systems §140.6(a)1	Field Inspector: Pass	Field Inspector: Fail
Parking Garage	Parking Garage Building	Manual ON/OFF	Exempt *	Occ Sensor	Included	Included	☐	☐	☐

*NOTES: Controls with a * require a note in the space below explaining how compliance is achieved. 13

EX: Conference 1: Primary/Skylight Daylighting: Exempt because less than 120 watts of general lighting; EXCEPTION 1 to §130.1(d)2 Plan Sheet Showing Daylit Zones: E4.1 and E4.2

Parking Garage Parking Garage: Multi Level: Exempt because lighting load is less than 0.5W per sq.ft.

CA Building Energy Efficiency Standards - 2016 Nonresidential Compliance: http://www.energy.ca.gov/title24/2016standards March 2018

STATE OF CALIFORNIA
Indoor Lighting
NRCC-LTI-E (Created 3/18) CALIFORNIA ENERGY COMMISSION

CERTIFICATE OF COMPLIANCE		NRCC-LTI-E
Project Name: TCMC Parking Structure and Main Entry	Report Page:	Page 4 of 7
Project Address: 4002 Vista Way, Oceanside, CA 92056	Date Prepared:	05/17/2018

I. LIGHTING POWER ALLOWANCE: COMPLETE BUILDING OR AREA CATEGORY METHODS

Table Instructions: Complete the table for each area complying using the Complete Building or Area Category Methods per §140.6(b). Indicate if additional lighting power allowances per §140.6(c) or adjustments per §140.6(a) are being used.

Unconditioned Spaces

01	02	03	04	05	06		
Area Description	Complete Building or Area Category Primary Function Area	Allowed Density (W/ft²)	Area (ft²)	Allowed Wattage (Watts)	Additional Allowances / Adjustments: Footnotes	PAF	Portable Ltg
Parking Garage	Parking Garage Building	0.2	99,695	19,939	☐	☐	☐
		TOTAL:	**99,695**	**19,939**	See Tables J, K, R for detail		

J. POWER ADJUSTMENT: PORTABLE LIGHTING IN OFFICES

This Section Does Not Apply

K. ADDITIONAL LIGHTING ALLOWANCE: AREA CATEGORY METHOD FOOTNOTES

This Section Does Not Apply

L. TAILORED METHOD GENERAL LIGHTING POWER ALLOWANCE

This Section Does Not Apply

M. ADDITIONAL LIGHTING ALLOWANCE: TAILORED SPECIAL FUNCTION AREAS

This Section Does Not Apply

N. ADDITIONAL LIGHTING ALLOWANCE: TAILORED WALL DISPLAY

This Section Does Not Apply

O. ADDITIONAL LIGHTING ALLOWANCE: TAILORED FLOOR AND TASK LIGHTING

This Section Does Not Apply

P. ADDITIONAL LIGHTING ALLOWANCE: TAILORED ORNAMENTAL/SPECIAL EFFECTS

This Section Does Not Apply

CA Building Energy Efficiency Standards - 2016 Nonresidential Compliance: http://www.energy.ca.gov/title24/2016standards March 2018

STATE OF CALIFORNIA
Indoor Lighting
NRCC-LTI-E (Created 3/18) CALIFORNIA ENERGY COMMISSION

CERTIFICATE OF COMPLIANCE		NRCC-LTI-E
Project Name: TCMC Parking Structure and Main Entry	Report Page:	Page 5 of 7
Project Address: 4002 Vista Way, Oceanside, CA 92056	Date Prepared:	05/17/2018

Q. ADDITIONAL LIGHTING ALLOWANCE: TAILORED VERY VALUABLE MERCHANDISE

This Section Does Not Apply

R. POWER ADJUSTMENT: LIGHTING CONTROL CREDIT (PAF)

Table Instructions: Please complete the table for all areas indicated in Table I or Table L as using a PAF credit described in §140.6(a)2.

Conditioned Spaces

01	02							03	04	05	06	07
Area Description	PAF per §140.6(a)2 (*Can be used in conjunction with other PAF's)							Luminaires Controlled for PAF Credit				Control Credit Power Adjustment (Watts)
	1	2A	2B	2C	3A*	3B*	4*	Luminaire Name or Item Tag	Watts per Luminaire	# of Luminaires	Lighting Controlled (Watts)	
	Pick up to one				Pick up to one							
	☐	☐	☐	☐	☐	☐	☐				0	0
												08
Total Power Adjustment (Watts) CONDITIONED SPACES:												**0**

S. RATED POWER REDUCTION COMPLIANCE BY SPACE

This Section Does Not Apply

CA Building Energy Efficiency Standards - 2016 Nonresidential Compliance: http://www.energy.ca.gov/title24/2016standards March 2018

STATE OF CALIFORNIA
Indoor Lighting
NRCC-LTI-E (Created 3/18) CALIFORNIA ENERGY COMMISSION

CERTIFICATE OF COMPLIANCE		NRCC-LTI-E
Project Name: TCMC Parking Structure and Main Entry	Report Page:	Page 6 of 7
Project Address: 4002 Vista Way, Oceanside, CA 92056	Date Prepared:	05/17/2018

T. DECLARATION OF REQUIRED CERTIFICATES OF INSTALLATION

Table Instructions: Selections have been made based on information provided in previous tables of this document. If any selection needs to be changed, please explain why in Table E. Additional Remarks. These documents must be provided to the building inspector during construction and can be found online at http://www.energy.ca.gov/2015publications/CEC-400-2015-033/appendices/forms/NRCI

YES	NO	Form/Title	Field Inspector: Pass	Field Inspector: Fail
◉	○	NRCI-LTI-01-E - Must be submitted for all buildings	☐	☐
◉	○	NRCI-LTI-02-E - Must be submitted for a lighting control system, or for an Energy Management Control System (EMCS), to be recognized for compliance.	☐	☐
○	◉	NRCI-LTI-03-E - Must be submitted for a line-voltage track lighting integral current limiter, or for a supplementary overcurrent protection panel used to energize only line-voltage track lighting, to be recognized for compliance.	☐	☐
○	◉	NRCI-LTI-04-E - Must be submitted for two interlocked systems serving an auditorium, a convention center, a conference room, a multipurpose room, or a theater to be recognized for compliance.	☐	☐
○	◉	NRCI-LTI-05-E - Must be submitted for a Power Adjustment Factor (PAF) to be recognized for compliance.	☐	☐
○	◉	NRCI-LTI-06-E - Must be submitted for additional wattage installed in a video conferencing studio to be recognized for compliance.	☐	☐

U. DECLARATION OF REQUIRED CERTIFICATES OF ACCEPTANCE

Table Instructions: Selections have been made based on information provided in previous tables of this document. If any selection needs to be changed, please explain why in Table E. Additional Remarks. These documents must be provided to the building inspector during construction and must be completed through an Acceptance Test Technician Certification Provider (ATTCP). For more information visit: http://www.energy.ca.gov/title24/attcp/providers.html

YES	NO	Form/Title	Field Inspector: Pass	Field Inspector: Fail
◉	○	NRCA-LTI-02-A - Must be submitted for occupancy sensors and automatic time switch controls.	☐	☐
◉	○	NRCA-LTI-03-A - Must be submitted for automatic daylight controls.	☐	☐
○	◉	NRCA-LTI-04-A - Must be submitted for demand responsive lighting controls.	☐	☐
○	◉	NRCA-LTI-05-A - Must be submitted for institutional tuning power adjustment factor (PAF).	☐	☐

CA Building Energy Efficiency Standards - 2016 Nonresidential Compliance: http://www.energy.ca.gov/title24/2016standards March 2018

STATE OF CALIFORNIA
Indoor Lighting
NRCC-LTI-E (Created 3/18) CALIFORNIA ENERGY COMMISSION

CERTIFICATE OF COMPLIANCE		NRCC-LTI-E
Project Name: TCMC Parking Structure and Main Entry	Report Page:	Page 7 of 7
Project Address: 4002 Vista Way, Oceanside, CA 92056	Date Prepared:	05/17/2018

DOCUMENTATION AUTHOR'S DECLARATION STATEMENT

Documentation Author Name:	Kurt Kholer	Documentation Author Signature:	
Company:	Randall Lamb	Signature Date:	05/17/2018
Address:	4757 Palm Ave	CEA/ HERS Certification Identification (if applicable):	
City/State/Zip:	La Mesa/CA/91942	Phone:	619-713-5700

RESPONSIBLE PERSON'S DECLARATION STATEMENT

I certify the following under penalty of perjury, under the laws of the State of California:

1. **The information provided on this Certificate of Compliance is true and correct.**
2. **I am eligible under Division 3 of the Business and Professions Code to accept responsibility for the building design or system design identified on this Certificate of Compliance (responsible designer)**
3. **The energy features and performance specifications, materials, components, and manufactured devices for the building design or system design identified on this Certificate of Compliance conform to the requirements of Title 24, Part 1 and Part 6 of the California Code of Regulations.**
4. **The building design features or system design features identified on this Certificate of Compliance are consistent with the information provided on other applicable compliance documents, worksheets, calculations, plans and specifications submitted to the enforcement agency for approval with this building permit application.**
5. **I will ensure that a completed signed copy of this Certificate of Compliance shall be made available with the building permit(s) issued for the building, and made available to the enforcement agency for all applicable inspections. I understand that a completed signed copy of this Certificate of Compliance is required to be included with the documentation the builder provides to the building owner at occupancy.**

Responsible Designer Name:	Kurt Kohler	Responsible Designer Signature:	
Company :	Randall Lamb	Date Signed:	05/17/2018
Address:	4757 Palm Ave	License:	10987
City/State/Zip:	La Mesa/CA/91942	Phone:	619-713-5700

CA Building Energy Efficiency Standards - 2016 Nonresidential Compliance: http://www.energy.ca.gov/title24/2016standards March 2018

CUNINGHAM GROUP

Cuningham Group Architecture, Inc.
1030 G Street
San Diego, CA 92101

Tel: 619 849 1080
Fax: 619 849 1089

www.cuningham.com

Consultant

RANDALL LAMB
4757 Palm Avenue
La Mesa, CA 91942
(619) 713-5700

Revisions

No.	Date	Description

REGISTERED PROFESSIONAL ENGINEER KURT KOHLER No. 10987 ELECTRICAL STATE OF CALIFORNIA

1/11/2018
RL #SD17238.00

Document Phase: Backcheck 1
Date: MAY 24th, 2018
PIC / AIC: -
Drawn By: -
Checked By: -
Comm. No.: -

Project Title
TCMC PARKING STRUCTURE AND MAIN ENTRY

Sheet Title
TITLE 24 DOCUMENTATION

Sheet Number
E1.2

2018.05.29 BIDSET

Copyright©2017by Cuningham Group Architecture, Inc. (All Rights Reserved)

STATE OF CALIFORNIA
Outdoor Lighting
NRCC-LTO-E (Created 9/17) CALIFORNIA ENERGY COMMISSION

CERTIFICATE OF COMPLIANCE		NRCC-LTO-E
This document is used to demonstrate compliance with requirements in §110.9, §130.0, §130.2, §140.7, and §141.0(b)2L for outdoor lighting scopes using the prescriptive path.		
Project Name: TCMC Parking Structure	Report Page:	Page 1 of 6
Project Address: 4002 Vista Way, Oceanside, CA 92056	Date Prepared:	05/17/2018

A. GENERAL INFORMATION

01	Project Location (city)	Oceanside	04	Total Illuminated Hardscape Area (ft²)	132,511
02	Climate Zone	7			
03	Outdoor Lighting Zone per Title 24, Part 1 §10-114 or as designated by Authority Having Jurisdiction (AHJ):				
☐ LZ-0: Very Low - Undeveloped Parkland		☐ LZ-2: Moderate - Rural Areas		☐ LZ-4: High - Must be reviewed by CA Energy Commission for Approval	
☐ LZ-1: Low - Developed Parkland		☑ LZ-3: Moderately High - Urban Areas			

B. PROJECT SCOPE

Table Instructions: Include any outdoor lighting systems that are within the scope of the permit application and are demonstrating compliance using the prescriptive path outlined in §140.7 or §141.0(b)2L for alterations.

My project consists of:

01	02
☑ New Lighting System	Must Comply with Allowances from §140.7.
☐ Altered Lighting System	Is your alteration increasing the connected lighting load (Watts)? ◯ Yes ◯ No

Please proceed to Table F. Outdoor Lighting Fixture Schedule to define the project's luminaires.

[1] *FOOTNOTES: % of Existing Luminaires Being Altered = (Sum Total of Luminaires Being Added or Altered / Existing Luminaires within the Scope of the Permit Application) x 100*

C. COMPLIANCE RESULTS

Table Instructions: If any cell on this table says "DOES NOT COMPLY" or "COMPLIES with Exceptional Conditions" refer to Table D. for guidance.

Calculation of Total Allowed Lighting Power (Watts) §140.7 or §141.0(b)2L												Compliance Results		
01		02		03		04		05		06		07		08		09
General Hardscape Allowance §140.7(d)1	+	Per Application §140.7(d)2	+	Sales Frontage §140.7(d)2	+	Ornamental §140.7(d)2	+	Per Specific Area §140.7(d)2	OR	Existing Power §141.0(b)2L	=	**Total Allowed** (Watts)	≥	**Total Actual** (Watts)		**07 Must be ≥ 08**
(See Table I)		(See Table J)		(See Table K)		(See Table L)		(See Table M)		(See Table N)				(See Table F)		
7,184.04	+		+		+		+		OR		=	7,184.04	≥	5,238		**COMPLIES**
Cutoff Compliance (See Table G for Details)												**Not Applicable**				
Controls Compliance (See Table H for Details)												**COMPLIES**				

STATE OF CALIFORNIA
Outdoor Lighting
NRCC-LTO-E (Created 9/17) CALIFORNIA ENERGY COMMISSION

CERTIFICATE OF COMPLIANCE		NRCC-LTO-E
Project Name: TCMC Parking Structure	Report Page:	Page 4 of 6
Project Address: 4002 Vista Way, Oceanside, CA 92056	Date Prepared:	05/17/2018

Calculated General Hardscape Lighting Power Allowance per Table 140.7-A

Parking Roof	57,522	0.04	2,300.88	995	0.35	348.25	2,649.13
Parking Lot	74,989	0.04	2,999.56	2,901	0.35	1,015.35	4,014.91
						Initial Wattage Allowance for Entire Site (Watts):	**520**
						Total General Hardscape Allowance (Watts):	**7,184.04**

J. LIGHTING ALLOWANCE: PER APPLICATION

This Section Does Not Apply

K. LIGHTING ALLOWANCE: SALES FRONTAGE

This Section Does Not Apply

L. LIGHTING ALLOWANCE: ORNAMENTAL

This Section Does Not Apply

M. LIGHTING ALLOWANCE: PER SPECIFIC AREA

This Section Does Not Apply

N. EXISTING CONDITIONS POWER ALLOWANCE (alterations only)

This Section Does Not Apply

O. DECLARATION OF REQUIRED CERTIFICATES OF INSTALLATION

Table Instructions: Selections have been made based on information provided in previous tables of this document. If any selection needs to be changed, please explain why in Table E. Additional Remarks. These documents must be provided to the building inspector during construction and can be found online at http://www.energy.ca.gov/2015publications/CEC-400-2015-033/appendices/forms/NRCI

YES	NO	Form/Title	Field Inspector Pass	Field Inspector Fail
◉	◯	NRCI-LTO-01-E - Must be submitted for all buildings.	☐	☐
◉	◯	NRCI-LTO-02-E - Must be submitted for a lighting control system; or for an Energy Management Control System (EMCS), to be recognized for compliance.	☐	☐

STATE OF CALIFORNIA
Outdoor Lighting
NRCC-LTO-E (Created 9/17) CALIFORNIA ENERGY COMMISSION

CERTIFICATE OF COMPLIANCE		NRCC-LTO-E
Project Name: TCMC Parking Structure	Report Page:	Page 2 of 6
Project Address: 4002 Vista Way, Oceanside, CA 92056	Date Prepared:	05/17/2018

D. EXCEPTIONAL CONDITIONS

This table is auto-filled with uneditable comments because of selections made or data entered in tables throughout the form.

No exceptional conditions apply to this project.

E. ADDITIONAL REMARKS

This table includes remarks made by the permit applicant to the Authority Having Jurisdiction.

F. OUTDOOR LIGHTING FIXTURE SCHEDULE

Table Instructions: For new or altered lighting systems demonstrating compliance with §140.7 (ie Table I has expanded for input), include all luminaires being installed and any existing luminaires remaining or being moved within the spaces covered by the permit application in the Table below. For altered lighting systems using the Existing Power method per §141.0(b)2L (ie Table N has expanded for input), include only new luminaires being installed and replacement luminaires being installed as part of the project scope (ie, do not include existing luminaires remaining or existing luminaires being moved).

Designed Wattage:

01	02	03	04	05	06	07	08	09	10	
Name or Item Tag	Complete Luminaire Description	Watts per luminaire[1]	How Wattage is determined	Total number luminaires	Luminaire Status[2]	Excluded per §140.7(a)	Design Watts	Cutoff Req. > 150W §130.2(b)[3]	Field Inspector Pass	Field Inspector Fail
A	LED Pole Mounted Area Light	138	Mfr. Spec[1]	23	New	☐	3,174		☐	☐
B	LED Pole Mounted Area Light	138	Mfr. Spec[1]	3	New	☐	414		☐	☐
C	LED Pole Mounted Area Light	70	Mfr. Spec[1]	16	New	☐	1,120		☐	☐
H	LED Pedestrian Area Light	75	Mfr. Spec[1]	6	New	☐	450		☐	☐
J	LED Wall Mounted Light	40	Mfr. Spec[1]	2	New	☐	80		☐	☐
						Total Designed Watts:	**5,238**			

* NOTES: Selections with a * require a note in the space below explaining how compliance is achieved.
EX: Luminaire is lighting a statue; EXCEPTION 2 to §130.2(b).

[1] *FOOTNOTES: Authority Having Jurisdiction may ask for Luminaire cut sheets to confirm wattage used for compliance per §130.0(c)*
[2] *Select "New" for new luminaires in a new outdoor lighting project or for added luminaires in an alteration. Select "Altered" for replacement luminaires in an alteration. Select "Existing to Remain" for existing luminaires within the project scope that are not being altered and are remaining. Select "Existing Reinstalled" for existing luminaires which are being removed and reinstalled as part of the project scope*
[3] *Compliance with mandatory cutoff requirements is required for luminaires with wattage > 150 Watts unless exempted by §130.2(b).*

STATE OF CALIFORNIA
Outdoor Lighting
NRCC-LTO-E (Created 9/17) CALIFORNIA ENERGY COMMISSION

CERTIFICATE OF COMPLIANCE		NRCC-LTO-E
Project Name: TCMC Parking Structure	Report Page:	Page 5 of 6
Project Address: 4002 Vista Way, Oceanside, CA 92056	Date Prepared:	05/17/2018

P. DECLARATION OF REQUIRED CERTIFICATES OF ACCEPTANCE

Table Instructions: Selections have been made based on information provided in previous tables of this document. If any selection needs to be changed, please explain why in Table E. Additional Remarks. These documents must be provided to the building inspector during construction and must be completed through an Acceptance Test Technician Certification Provider (ATTCP). For more information visit: http://www.energy.ca.gov/title24/attcp/providers.html

YES	NO	Form/Title	Field Inspector Pass	Field Inspector Fail
◉	◯	NRCA-LTO-02-A - Must be submitted for all outdoor lighting controls except for alterations where controls area added to ≤ 20 luminaires.	☐	☐

STATE OF CALIFORNIA
Outdoor Lighting
NRCC-LTO-E (Created 9/17) CALIFORNIA ENERGY COMMISSION

CERTIFICATE OF COMPLIANCE		NRCC-LTO-E
Project Name: TCMC Parking Structure	Report Page:	Page 3 of 6
Project Address: 4002 Vista Way, Oceanside, CA 92056	Date Prepared:	05/17/2018

G. CUTOFF REQUIREMENTS (BUG)

This Section Does Not Apply

H. OUTDOOR LIGHTING CONTROLS

Table Instructions: Complete this table demonstrating compliance with controls requirements for all new or altered luminaires installed as part of the permit application. For alteration projects, luminaires which are existing to remain (ie untouched) and luminaires which are removed and reinstalled (wiring only) do not need to be included in this table even if they are within the spaces covered by the permit application.
*When an option having a * is selected, the notes section of this table must be completed. The lighting controls section of the Compliance Summary Table on the first page will show "DOES NOT COMPLY" if the notes are left blank. For each requirement in columns 02 through 07, do not leave the field blank, instead select NA or Exempt* from the dropdown list to indicate not applicable or an exemption.*

Mandatory Controls

01	02	03	04	05	06	07	08	
Area Description	Motion Sensor: Incandescent>100W §130.2(a)	Shut-Off §130.2(c)1	Auto-Schedule §130.2(c)2	Motion Sensor §130.2(c)3	Sales Frontage §130.2(c)4	Façade, Ornament, Outdoor Dining §130.2(c)5	Field Inspector Pass	Field Inspector Fail
Parking Roof	NA: No Incand>100W	Astronomical Timer	Yes	Yes	NA: No Sales Front Ltg	No Applicable Ltg	☐	☐
Parking Lot	NA: No Incand>100W	Astronomical Timer	Yes	Yes	NA: No Sales Front Ltg	No Applicable Ltg	☐	☐

*NOTES: Controls with a * require a note in the space below explaining how compliance is achieved.
EX: Not permitted by health & safety to be turned off; EXCEPTION 1 to §130.2(c).

I. LIGHTING POWER ALLOWANCE (per §140.7)

Table Instructions: Please complete this table for areas using the allowance calculations per §140.7. General Hardscape Allowance is per Table 140.7-A while "Use it or lost it" Allowances are per Table 140.7-B. Indicate which allowances are being used to expand sections for user input. Luminaires that qualify for one of the "Use it or lose it" allowances shall not qualify for another "Use it or lose it" allowance.

01							
	"Use it or lose it" Allowance (Watts)						
☑ General Hardscape Allowance	☐ Per Application	☐ Sales Frontage	☐ Ornamental	☐ Per Specific Area			
Table I (below)	Table J	Table K	Table L	Table M			

Calculated General Hardscape Lighting Power Allowance per Table 140.7-A

02	03	04	05	06	07	08	09
Area Description	Area Wattage Allowance (AWA)			Linear Wattage Allowance (LWA)			Total General AWA + LWA (Watts)
	Illuminated Area (ft²)	Allowed Density (W/ft²)	Area Allowance (Watts)	Perimeter Length (lf)	Allowed Density (W/lf)	Linear Allowance (Watts)	

Table Continued

STATE OF CALIFORNIA
Outdoor Lighting
NRCC-LTO-E (Created 9/17) CALIFORNIA ENERGY COMMISSION

CERTIFICATE OF COMPLIANCE		NRCC-LTO-E
Project Name: TCMC Parking Structure	Report Page:	Page 6 of 6
Project Address: 4002 Vista Way, Oceanside, CA 92056	Date Prepared:	05/17/2018

DOCUMENTATION AUTHOR'S DECLARATION STATEMENT

Documentation Author Name:	TCMC Parking Structure	Documentation Author Signature:	
Company:	Randall Lamb	Signature Date:	05/17/2018
Address:	4757 Palm Ave	CEA/ HERS Certification Identification (if applicable):	
City/State/Zip:	La Mesa/CA/91942	Phone:	619-716-5700

RESPONSIBLE PERSON'S DECLARATION STATEMENT
I certify the following under penalty of perjury, under the laws of the State of California:
1. The information provided on this Certificate of Compliance is true and correct.
2. I am eligible under Division 3 of the Business and Professions Code to accept responsibility for the building design or system design identified on this Certificate of Compliance (responsible designer)
3. The energy features and performance specifications, materials, components, and manufactured devices for the building design or system design identified on this Certificate of Compliance conform to the requirements of Title 24, Part 1 and Part 6 of the California Code of Regulations.
4. The building design features or system design features identified on this Certificate of Compliance are consistent with the information provided on other applicable compliance documents, worksheets, calculations, plans and specifications submitted to the enforcement agency for approval with this building permit application.
5. I will ensure that a completed signed copy of this Certificate of Compliance shall be made available with the building permit(s) issued for the building, and made available to the enforcement agency for all applicable inspections. I understand that a completed signed copy of this Certificate of Compliance is required to be included with the documentation the builder provides to the building owner at occupancy.

Responsible Designer Name:	TCMC Parking Structure	Responsible Designer Signature:	
Company :	Randall Lamb	Date Signed:	05/17/2018
Address:	4757 Palm Ave	License:	10987
City/State/Zip:	La Mesa/CA/91942	Phone:	619-716-5700

CUNINGHAM GROUP

Cuningham Group Architecture, Inc.

1030 G Street
San Diego, CA 92101

Tel: 619 849 1080
Fax: 619 849 1089

www.cuningham.com

Consultant

RANDALL LAMB
4757 Palm Avenue
La Mesa, CA 91942
(619) 713-5700

Revisions

No.	Date	Description

REGISTERED PROFESSIONAL ENGINEER — RANDALL LAMB — No. 10987 — ELECTRICAL — STATE OF CALIFORNIA

1/11/2018
RL #SD17238.00

Document Phase:	Backcheck 1
Date:	MAY 24th, 2018
PIC / AIC:	-
Drawn By:	-
Checked By:	-
Comm. No.:	-

Project Title

TCMC PARKING STRUCTURE AND MAIN ENTRY

Sheet Title

TITLE 24 DOCUMENTATION

Sheet Number

E1.3

2018.05.29 BIDSET

Copyright © 2017 by Cuningham Group Architecture, Inc. (All Rights Reserved)

MSB

ROOM — VOLTS 480Y/277V 3P 4W — AIC 42,000
MOUNTING FLOOR — BUS AMPS 600 — MAIN BKR MLO
FED FROM UTILITY — NEUTRAL 100% — LUGS STANDARD
NOTE

CKT #	CIRCUIT DESCRIPTION	KVA LOAD A	KVA LOAD B	KVA LOAD C	BREAKER TRIP/POLES	COND.	FEEDER RACEWAY AND CONDUCTORS
1	ELV-1	7.48	7.48	7.48	60/3	CU	
2	ELV-2	7.48	7.48	7.48	60/3	CU	
3	PANEL L1	2.68	3.28	8.37	100/3	CU	
4	XFMR T1	7.17	3.23	4.15	60/3	CU	
5	XFMR T2	34.1	31	27.9	250/3	CU	
6	SPARE	0	0	0	15/3	CU	
7	SPARE	0	0	0	20/3	CU	
8	SPARE	0	0	0	20/3	CU	
9	SPARE	0	0	0	20/3	CU	
10	SPARE	0	0	0	20/3	CU	
11	SPARE	0	0	0	20/3	CU	
12	SPARE	0	0	0	20/3	CU	
13	SPARE	0	0	0	20/3	CU	
14	SPARE	0	0	0	20/3	CU	
15	SPARE	0	0	0	20/3	CU	
16	SPARE	0	0	0	20/3	CU	
17	SPARE	0	0	0	20/3	CU	
18	SPARE	0	0	0	20/3	CU	
19	SPARE	0	0	0	20/3	CU	
20	SPARE	0	0	0	20/3	CU	
	TOTAL CONNECTED KVA BY PHASE	58.9	52.5	55.4			

	CONN. KVA	CALC. KVA			CONN. KVA	CALC. KVA	
LIGHTING	14.4	18	(125%)	CONTINUOUS	94	118	(125%)
LARGEST MOTOR	22.5	28.1	(125%)	HEATING	0	0	(100%)
OTHER MOTORS	31	31	(100%)	NONCONTINUOUS	1.64	1.64	(100%)
RECEPTACLES	3.24	3.24	(50%>10)	KITCHEN EQUIP	0	0	(N/A)
EXISTING LOAD	0	0	(125%)	NONCOIN/DIVERSE	0	0	(N/A)
				TOTAL KVA	167	199	

BALANCED THREE PHASE AMPS 240

Panel EVC

ROOM — VOLTS 208Y/120V 3P 4W — AIC 22,000
MOUNTING SURFACE — BUS AMPS 400 — MAIN BKR 400
FED FROM T2 — NEUTRAL 100% — LUGS STANDARD
NOTE

CKT #	CKT BKR	LOAD KVA	CIRCUIT DESCRIPTION		CKT #	CKT BKR	LOAD KVA	CIRCUIT DESCRIPTION
1 (1)	40/2	6.2	EVC STATION	a	2	40/2	6.2	EVC STATION (1)
3	|			b	4	|		
5	40/2	6.2	EVC STATION	c	6	40/2	6.2	EVC STATION
7	|			a	8	|		
9	40/2	6.2	EVC STATION	b	10	40/2	6.2	EVC STATION
11	|			c	12	|		
13	40/2	6.2	EVC STATION	a	14	40/2	6.2	EVC STATION
15	|			b	16	|		
17	40/2	6.2	EVC STATION	c	18	40/2	6.2	EVC STATION
19	|			a	20	|		
21	40/2	6.2	EVC STATION	b	22	40/2	6.2	EVC STATION
23	|			c	24	|		
25	40/2	6.2	EVC STATION	a	26	40/2	6.2	EVC STATION
27	|			b	28	|		
29	20/1	0	SPARE	c	30	40/2	6.2	EVC STATION
31	20/1	0	SPARE	a	32	|		
33	20/1	0	SPARE	b	34	20/1	0	SPARE
35	20/1	0	SPARE	c	36	20/1	0	SPARE
37	20/1	0	SPARE	a	38	20/1	0	SPARE
39	20/1	0	SPARE	b	40	20/1	0	SPARE
41	20/1	0	SPARE	c	42	20/1	0	SPARE

	CONN. KVA	CALC. KVA			CONN. KVA	CALC. KVA	
LIGHTING	0	0	(125%)	CONTINUOUS	93	116	(125%)
LARGEST MOTOR	0	0	(125%)	HEATING	0	0	(100%)
OTHER MOTORS	0	0	(100%)	NONCONTINUOUS	0	0	(100%)
RECEPTACLES	0	0	(50%>10)	KITCHEN EQUIP	0	0	(N/A)
EXISTING LOAD	0	0	(125%)	NONCOIN/DIVERSE	0	0	(N/A)
				TOTAL KVA	93	116	

BALANCED THREE PHASE AMPS 323

PHASE BALANCE PERCENT: PHASE A 110% PHASE B 100% PHASE C 89.9%

(1) PANEL LOADS AND CIRCUIT BREAKERS SHOWN FOR ESTIMATED LOADS ONLY. ALL ELECTRICAL VEHICLE CHARGING STATIONS ARE FUTURE PANEL BOARD SHALL BE PROVIDED WITH NO BRANCH CIRCUIT BREAKERS.

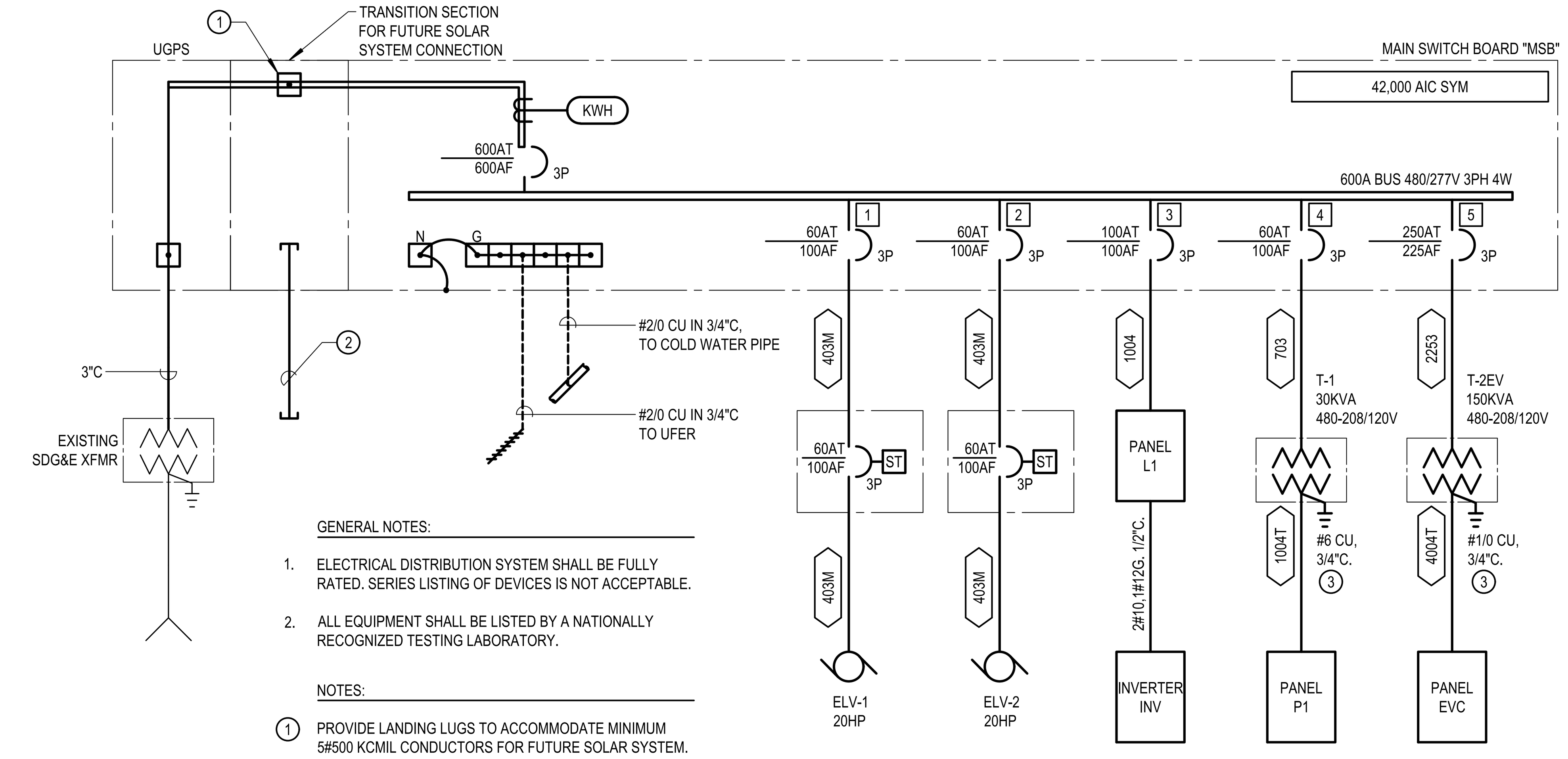

GENERAL NOTES:

1. ELECTRICAL DISTRIBUTION SYSTEM SHALL BE FULLY RATED. SERIES LISTING OF DEVICES IS NOT ACCEPTABLE.
2. ALL EQUIPMENT SHALL BE LISTED BY A NATIONALLY RECOGNIZED TESTING LABORATORY.

NOTES:

(1) PROVIDE LANDING LUGS TO ACCOMMODATE MINIMUM 5#500 KCMIL CONDUCTORS FOR FUTURE SOLAR SYSTEM.
(2) 4"C.O STUBBED TO FUTURE SOLAR POWER DISCONNECT / INVERTER. SEE POWER PLANS FOR PROPOSED LOCATION.
(3) GROUNDING CONDUCTOR TO BUILDING STEEL.

1 SINGLE LINE DIAGRAM

NOT TO SCALE

FEEDER SCHEDULE

NOTES FOR SCHEDULE:
1. ALL CONDUCTORS SHALL BE COPPER.
2. G = EQUIPMENT GROUNDING CONDUCTOR. N = NEUTRAL CONDUCTOR. SSBJ = SUPPLY SIDE BONDING JUMPER.
3. CONDUIT SIZES SHOWN ARE MINIMUM. PROVIDE LARGER CONDUIT WHERE INDICATED ON PLANS, SCHEDULES, OR DETAILS.
4. CONDUIT OTHER THAN EMT OR SCHEDULE 40 PVC SHALL BE SIZED IN COMLIANCE WITH THE NEC AND/OR CEC.
5. M = MOTOR, EQUIPMENT GROUDING CONDUCTOR SIZED PER NEC TABLE 250.122.

FEEDER TAG	FEEDER AMPACITY	SETS	CONDUIT SIZE EMT	CONDUIT SIZE PVC	CONDUCTORS IN EACH CONDUIT	COMMENTS/NOTES
403M	40	(1)	3/4"	3/4"	3#8 + 1#8 G	
703	70	(1)	1"	1-1/4"	3 #4 + 1 #8 G	
704	70	(1)	1-1/4"	1-1/4"	4 #4 + 1 #8 G	
1003	110	(1)	1-1/4"	1-1/2"	3 #1 + 1 #8 G	
1004	110	(1)	1-1/2"	1-1/2"	4 #1 + 1 #8 G	
1005	110	(1)	2"	2"	5 #1 + 1 #8 G	
1004T	110	(1)	1-1/2"	1-1/2"	4 #1 + 1 #6 SSBJ	
1253	130	(1)	1-1/4"	1-1/2"	3 #1 + 1 #6 G	
1254	130	(1)	1-1/2"	1-1/2"	4 #1 + 1 #6 G	
1255	116	(1)	2"	2"	5 #1 + 1 #6 G	
2253	230	(1)	2"	2-1/2"	3 #4/0 + 1 #4 G	
2254	230	(1)	2-1/2"	2-1/2"	4 #4/0 + 1 #4 G	
2255	208	(1)	3"	3"	5 #4/0 + 1 #4 G	
4003	420	(1)	3"	3-1/2"	3-600 kcmil + 1 #2 G	
4004	420	(1)	3-1/2"	4"	4-600 kcmil + 1 #2 G	
4005	380	(1)	4"	5"	5-600 kcmil + 1 #2 G	
4004T	420	(1)	3-1/2"	4"	4-600 kcmil + 1 #1/0 SSBJ	

Panel L1

ROOM — VOLTS 480Y/277V 3P 4W — AIC 30,000
MOUNTING SURFACE — BUS AMPS 100 — MAIN BKR MLO
FED FROM MSB — NEUTRAL 100% — LUGS STANDARD
NOTE

CKT #	CKT BKR	LOAD KVA	CIRCUIT DESCRIPTION		CKT #	CKT BKR	LOAD KVA	CIRCUIT DESCRIPTION
1	20/1	2.61	1ST FLR LTG	a	2	20/1	0	SPARE
3	20/1	3.08	2ND FLR LTG	b	4	20/1	0	SPARE
5	20/1	0.84	ROOF LTG	c	6	20/1	0	SPARE
7	20/1	0.067	ELEV. LOBBY & STAIRS LTG	a	8	20/1	0	SPARE
9	20/1	0.2	ROOMS & ELEV PIT LTG	b	10	20/1	0	SPARE
11	20/1	3.74	SITE LTG	c	12	20/1	0	SPARE
13	20/1	0	SPARE	a	14	20/1	0	SPARE
15	20/1	0	SPARE	b	16	20/1	0	SPARE
17	20/1	0	SPARE	c	18	20/1	0	SPARE
19	20/1	0	SPARE	a	20	20/1	0	SPARE
21	20/1	0	SPARE	b	22	20/1	0	SPARE
23	20/1	0	SPARE	c	24	20/1	0	SPARE
25	20/1	0	SPARE	a	26	20/1	0	SPARE
27	20/1	0	SPARE	b	28	20/1	0	SPARE
29	20/1	0	SPARE	c	30	30/1	3.79	PANEL INV

	CONN. KVA	CALC. KVA			CONN. KVA	CALC. KVA	
LIGHTING	14.3	17.9	(125%)	CONTINUOUS	0	0	(125%)
LARGEST MOTOR	0	0	(125%)	HEATING	0	0	(100%)
OTHER MOTORS	0	0	(100%)	NONCONTINUOUS	0	0	(100%)
RECEPTACLES	0	0	(50%>10)	KITCHEN EQUIP	0	0	(N/A)
EXISTING LOAD	0	0	(125%)	NONCOIN/DIVERSE	0	0	(N/A)
				TOTAL KVA	14.3	17.9	

BALANCED THREE PHASE AMPS 21.5

PHASE BALANCE PERCENT: PHASE A 56.1% PHASE B 68.7% PHASE C 175%

Panel INV

ROOM — VOLTS 277V 1P 2W — AIC 22,000
MOUNTING FLUSH — BUS AMPS 30 — MAIN BKR MLO
FED FROM L1 — NEUTRAL 100% — LUGS STANDARD
NOTE

CKT #	CKT BKR	LOAD KVA	CIRCUIT DESCRIPTION		CKT #	CKT BKR	LOAD KVA	CIRCUIT DESCRIPTION
1	20/1	0.911	1ST FLR EGRESS LTG	a	2	20/1	0	SPARE
3	20/1	0.978	2ND FLR EGRESS LTG	a	4	20/1	0	SPARE
5	20/1	0.585	ROOF EGRESS LTG	a	6	20/1	0	SPARE
7	20/1	1.07	STAIR EGRESS LTG	a	8	20/1	0	SPARE
9	20/1	0.042	EXIT SIGN	a	10	20/1	0.2	ELEVATOR CAB LTG

	CONN. KVA	CALC. KVA			CONN. KVA	CALC. KVA	
LIGHTING	3.79	4.74	(125%)	CONTINUOUS	0	0	(125%)
LARGEST MOTOR	0	0	(125%)	HEATING	0	0	(100%)
OTHER MOTORS	0	0	(100%)	NONCONTINUOUS	0	0	(100%)
RECEPTACLES	0	0	(50%>10)	KITCHEN EQUIP	0	0	(N/A)
EXISTING LOAD	0	0	(125%)	NONCOIN/DIVERSE	0	0	(N/A)
				TOTAL KVA	3.79	4.74	

PHASE AMPS 17.1

Panel P1

ROOM — VOLTS 208Y/120V 3P 4W — AIC 10,000
MOUNTING SURFACE — BUS AMPS 100 — MAIN BKR 100
FED FROM T1 — NEUTRAL 100% — LUGS STANDARD
NOTE

CKT #	CKT BKR	LOAD KVA	CIRCUIT DESCRIPTION		CKT #	CKT BKR	LOAD KVA	CIRCUIT DESCRIPTION
1	15/2	1.98	CU-1, FC-1	a	2	25/2	2.6	CU-3, FC-3
3	|			b	4	|		
5	30/2	2.9	CU-2, FC-2	c	6	20/1	0.5	GATE CONTROLS
7	|			a	8	20/1	0.5	GATE CONTROLS
9	20/1	0.1	LCP	b	10	20/1	0	SPARE
11	20/1	0.72	STORAGE RM. REC.	c	12	20/1	0.36	EMERGENCY PHONE
13	20/1	1.26	PARKING REC.	a	14	20/1	0.48	EMERGENCY PHONE
15	20/1	0.72	SERVER REC.	b	16	20/1	0.24	EMERGENCY PHONE
17	20/1	0.36	XPOINT WIFI	c	18	20/1	0.5	FA SYSTEM
19	20/1	0.54	SITE REC.	a	20	20/1	0.5	SECURITY SYSTEM
21	20/1	0	SPARE	b	22	20/1	0	SPARE
23	20/1	0	SPARE	c	24	20/1	0	SPARE
25	20/1	0	SPARE	a	26	20/1	0	SPARE
27	20/1	0	SPARE	b	28	20/1	0	SPARE
29	20/1	0	SPARE	c	30	20/1	0	SPARE

	CONN. KVA	CALC. KVA			CONN. KVA	CALC. KVA	
LIGHTING	0.1	0.125	(125%)	CONTINUOUS	1	1.25	(125%)
LARGEST MOTOR	2.81	3.51	(125%)	HEATING	0	0	(100%)
OTHER MOTORS	5.47	5.47	(100%)	NONCONTINUOUS	1.64	1.64	(100%)
RECEPTACLES	3.24	3.24	(50%>10)	KITCHEN EQUIP	0	0	(N/A)
EXISTING LOAD	0	0	(125%)	NONCOIN/DIVERSE	0	0	(N/A)
				TOTAL KVA	14.3	15.2	

BALANCED THREE PHASE AMPS 42.3

PHASE BALANCE PERCENT: PHASE A 144% PHASE B 73.9% PHASE C 81.7%

VOLTAGE DROP SCHEDULE

DEVICE	FEEDER VOLTAGE DROP	FEEDER WIRE SIZE	FEEDER LENGTH	BRANCH CIRCUIT MAX VOLTAGE DROP	BRANCH CIRCUIT WIRE SIZE	BRANCH CIRCUIT LENGTH	TOTAL VOLTAGE DROP
MSB	0%	(2)#350kcmil	-	-	-	-	0%
L1	0.01%	#1	7'-4"	0.01% (CKT 11)	#10	70'	0.02%
INV	0.23%	#10	17'	0.02% (CKT 5)	#12	52'	0.24%
T1	0.02%	#4	8'-4"	-	-	-	0.02%
P1	0.06%	#1	7'-4"	2.39% (CKT 1,3)	#10	263'	2.46%
T2	0.06%	#250kcmil	16'	-	-	-	0.06%
EVC	0.13%	#600kcmil	5'-5"	-	-	-	0.13%

FAULT CURRENT SCHEDULE

DEVICE	AIC RATING	FAULT TOTAL	FAULT UTILITY CONTRIBUTION	FAULT MOTOR CONTRIBUTION	FEEDER WIRE SIZE	FEEDER LENGTH	TRANSFORMER KVA	TRANSFORMER %Z
MSB	42,000	30,256	30,000	256	(2)#350kcmil			
L1	30,000	28,111	27,893	218	#1	7'-4"		
INV	22,000	10,936	10,918	18	#10	17'		
T1	22,000	4,521	4,424	97	#4	8'-4"	30	1.75
P1	10,000	4,413	4,316	97	#1	7'-4"		
T2	22,000	17,277	17,240	37	#250kcmil	16'	150	1.75
EVC	22,000	16,596	16,562	34	#600kcmil	5'-5"		

2018.05.29 BIDSET

CUNINGHAM GROUP

Cuningham Group Architecture, Inc.
1030 G Street
San Diego, CA 92101
Tel: 619 849 1080
Fax: 619 849 1089
www.cuningham.com

Consultant

RANDALL LAMB
4757 Palm Avenue
La Mesa, CA 91942
(619) 713-5700

Revisions

No.	Date	Description

REGISTERED PROFESSIONAL ENGINEER KURT R. KOHL NO. 10987 ELECTRICAL STATE OF CALIFORNIA

1/11/2018
RL #SD17238.00

Document Phase:	Backcheck # 1
Date:	MAY 24th, 2018
PIC / AIC:	-
Drawn By:	-
Checked By:	-
Comm. No.:	PR17-0311

Project Title

TCMC PARKING STRUCTURE AND MAIN ENTRY

Sheet Title

SINGLE DIAGRAM & PANEL SCHEDULES

Sheet Number

E2.1

Copyright © 2017 by Cuningham Group Architecture, Inc. (All Rights Reserved)

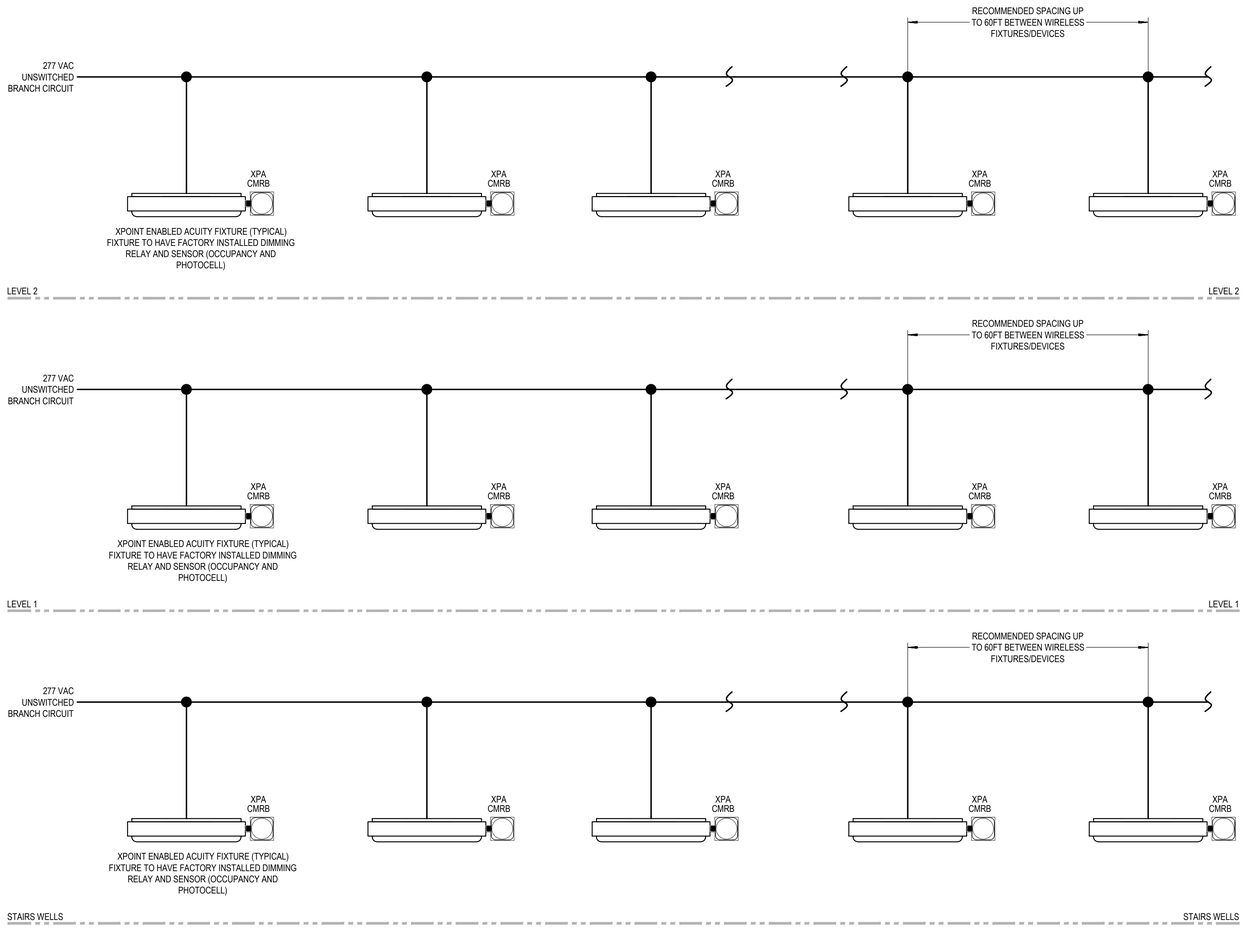

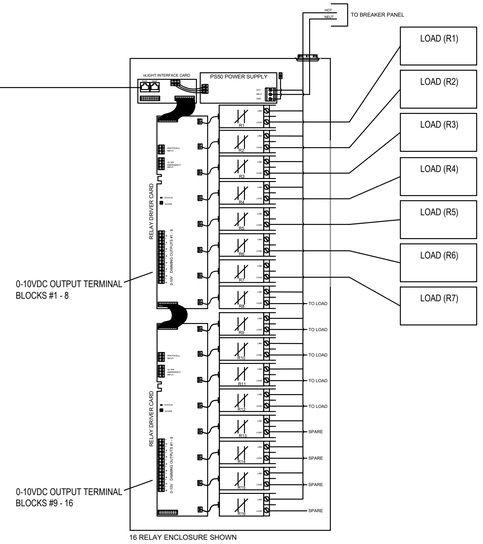

ARP NLT 16FCR
nLIGHT NETWORKED RELAY PANEL
-CONNECT TO nLIGHT CONTROLLER nECY FOR NETWORKED TIMECLOCK AND OVERRIDE CONTROL OF nLIGHT ZONES
-16 RELAY PANEL WITH FIELD CONFIGURABLE RELAYS
-PROVIDES SWITCHING AND 0-10V DIMMING CONTROL PER RELAY

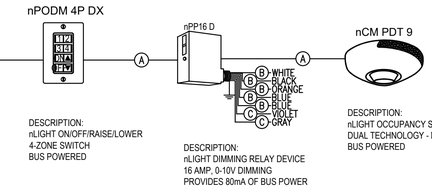

DESCRIPTION:
nLIGHT ON/OFF/RAISE/LOWER
4-ZONE SWITCH
BUS POWERED

DESCRIPTION:
nLIGHT DIMMING RELAY DEVICE
16 AMP, 0-10V DIMMING
PROVIDES 80mA OF BUS POWER

DESCRIPTION:
nLIGHT OCCUPANCY SENSOR
DUAL TECHNOLOGY - MICROPHONICS
BUS POWERED

BRANCH CIRCUIT OR FIXTURE CONTROL, NON-NLIGHT ENABLED FIXTURE (TYPICAL)

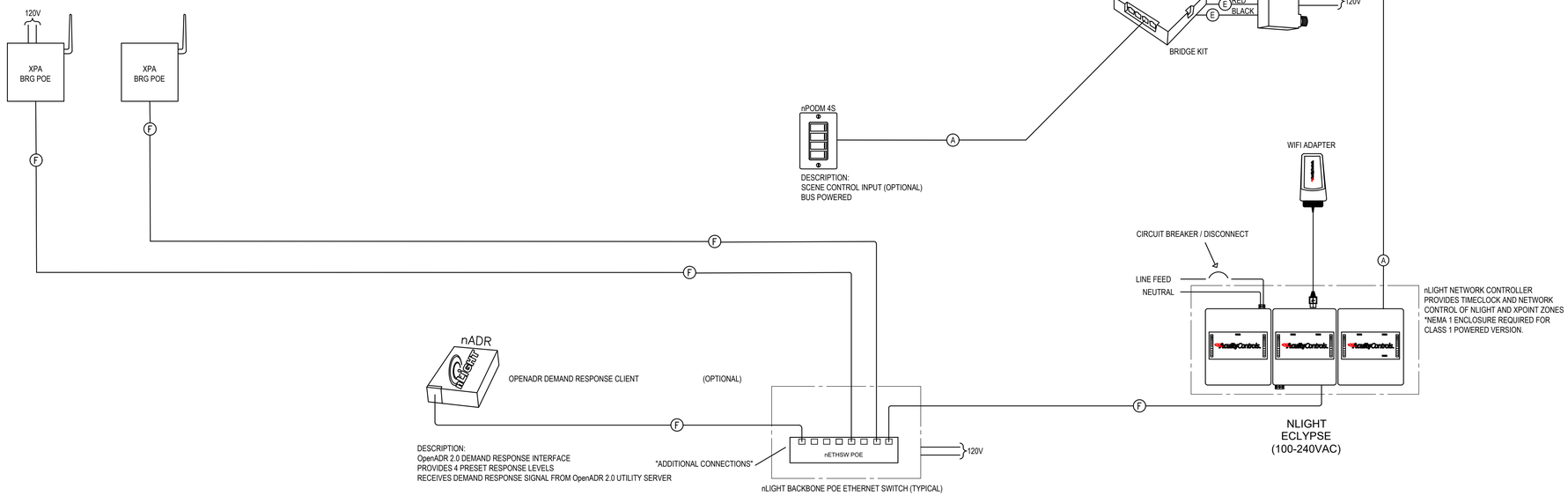

WIRE LEGEND	
A	CAT 5-E (CLASS 2)
B	LINE VOLTAGE
C	0-10 VDC
D	LOW VOLTAGE (1A @ 40 VDC/VAC)
E	15-24 VDC POWER
F	ETHERNET LAN (CLASS 2)

GENERAL NOTES

1. SEE FLOOR PLANS FOR QUANTITY OF LIGHT FIXTURES AND DEVICES.
2. LIGHTING CONTROLS SYSTEM IS BASED ON ACUITY BRANDS X-POINT WIRELESS AND N-LIGHT SYSTEM.
3. CONTRACTOR TO INCLUDE FACTORY START-UP OF SYSTEM. SYSTEM PROGRAMMING MEETING TO BE COMBINED 2 WEEKS PRIOR TO SUBMITTAL PRODUCT DATA AND SHOP DRAWING SUBMITTAL. ATTENDEES TO INCLUDE CONTRACTOR, FACTORY CONTROLS REP, ARCHITECT, ENGINEER AND OWNERS REP.
4. CONTRACTOR SHALL FURNISH AND INSTALL ALL LIGHTING CONTROL SYSTEM DEVICES, ACCESSORIES, CONDUCTORS, CONNECTIONS AND APPURTENANCES REQUIRED FOR A COMPLETELY FUNCTIONAL LIGHTING CONTROL SYSTEM. LIGHTING CONTROL SYSTEM SHALL FULLY COMPLY WITH ALL CALIFORNIA ENERGY COMMISION T24 REQUIREMENTS.

CUNINGHAM GROUP

Cuningham Group Architecture, Inc.

1030 G Street
San Diego, CA 92101

Tel: 619 849 1080
Fax: 619 849 1069

www.cuningham.com

Consultant

RANDALL LAMB
4757 Palm Avenue
La Mesa, CA 91942
(619) 713-5700

Revisions

No.	Date	Description

REGISTERED PROFESSIONAL ENGINEER — ELECTRICAL — STATE OF CALIFORNIA

1/11/2018
RL #SD17238.00

Document Phase:	Backcheck 1
Date:	MAY 24th, 2018
PIC / AIC:	-
Drawn By:	-
Checked By:	-
Comm, No.:	-

Project Title

TCMC PARKING STRUCTURE AND MAIN ENTRY

Sheet Title

LIGHTING CONTROLS DIAGRAM

Sheet Number

E2.2

2018.05.29 BIDSET

Copyright©2017by Cuningham Group Architecture, Inc. (All Rights Reserved)

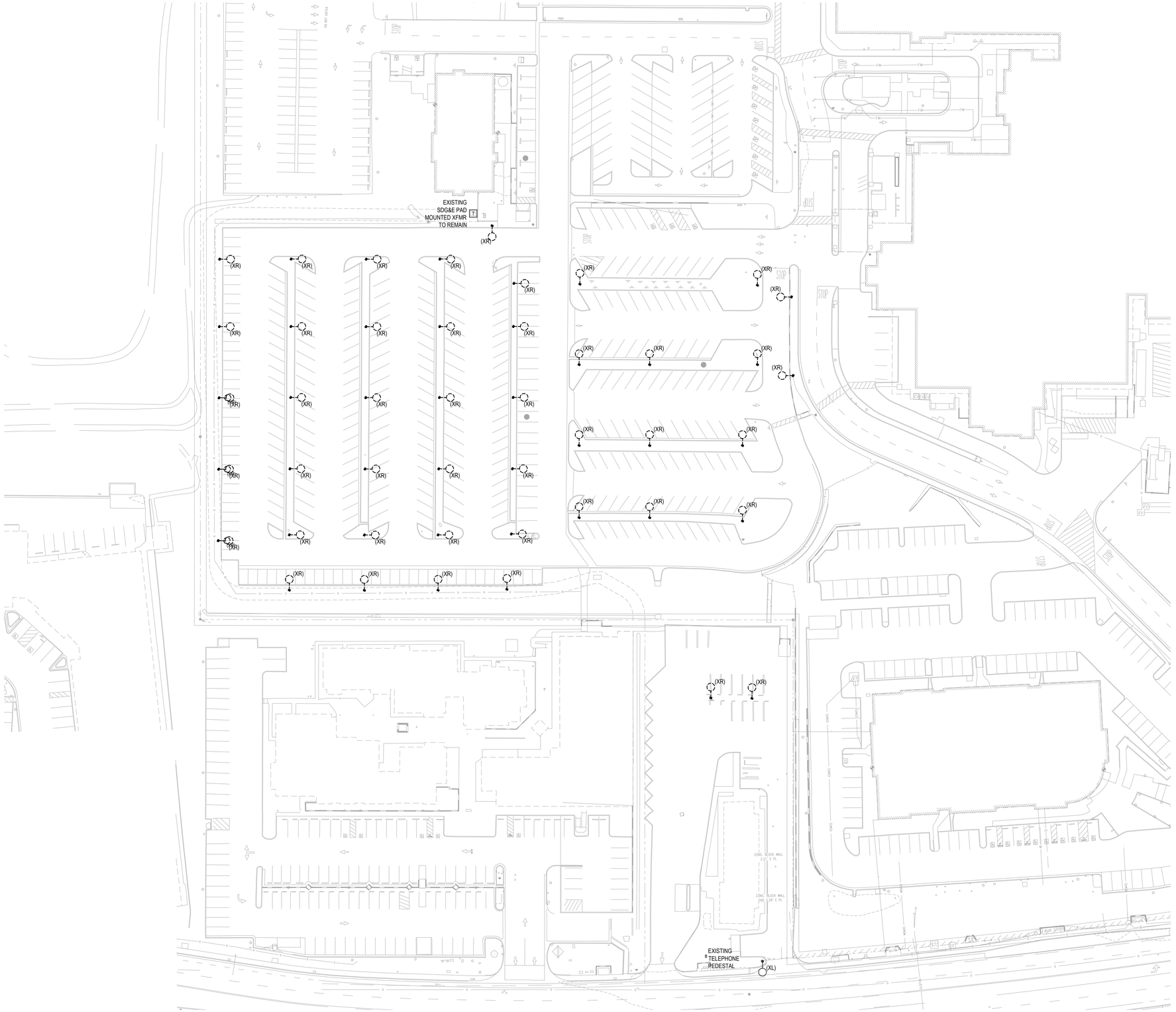
EXISTING
SDG&E PAD
MOUNTED XFMR
TO REMAIN
(XR)
(XL)
EXISTING
TELEPHONE
PEDESTAL
CONC. BLOCK WALL
2.2'± E. PL.
CONC. BLOCK WALL
(NO. 2.29' E. PL.
STOP
EDMO
EDMO
EDMO

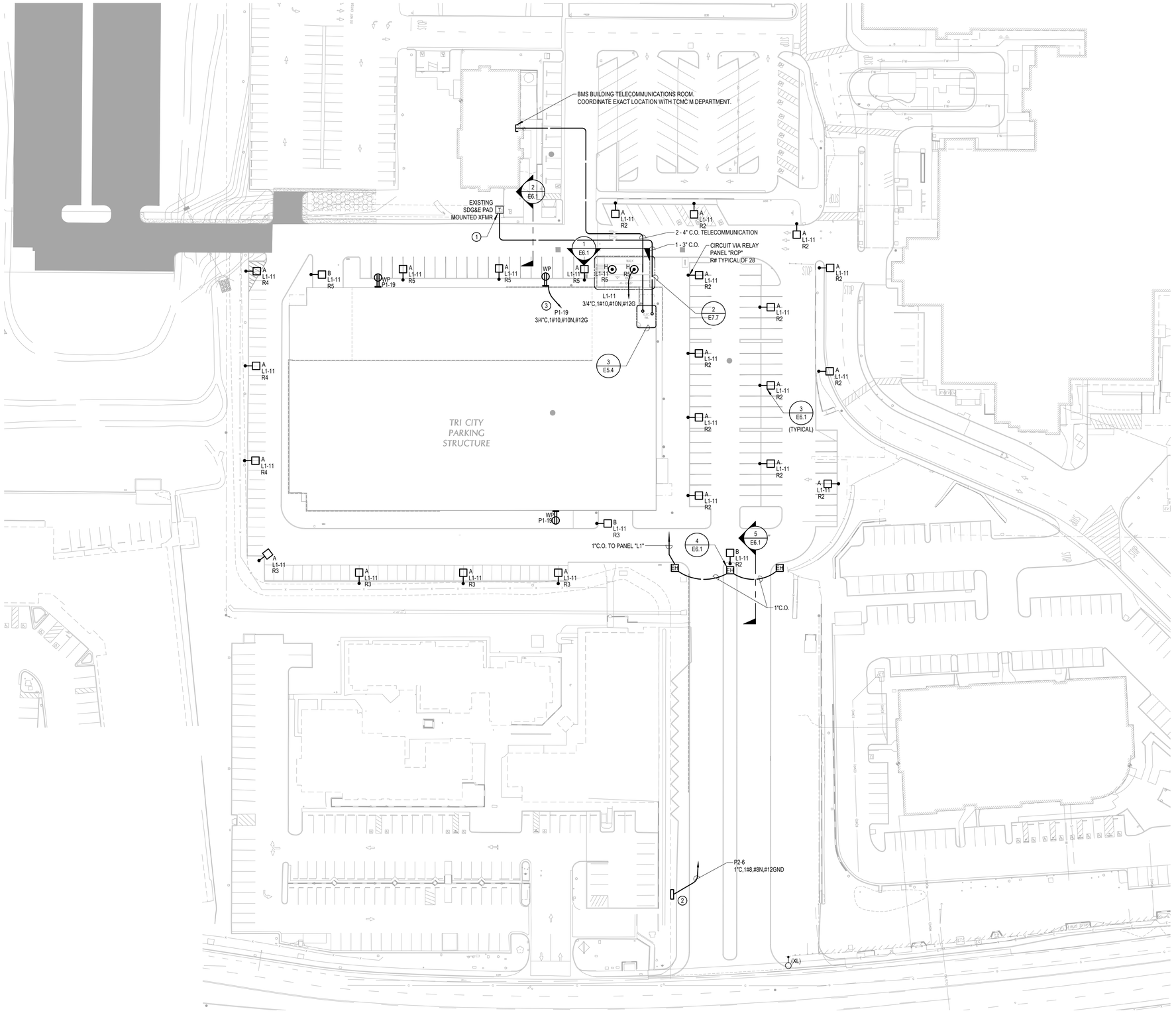

1 ELECTRICAL SITE PLAN

SCALE: 1" = 40'

NORTH

KEYNOTES

1. COORDINATE INSTALLATION OF UTILITY SERVICE CONDUIT INSTALLATION WITH SDG&E.
2. LANDSCAPE IRRIGATION CONTROLLER. COORDINATE EXACT LOCATION WITH LANDSCAPE CONTRACTOR.
3. UTILIZE #10 CONDUCTORS THROUGHOUT BRANCH CIRCUIT.

CUNINGHAM GROUP

Cuningham Group Architecture, Inc.

1030 G Street
San Diego, CA 92101

Tel: 619 849 1080
Fax: 619 849 1069

www.cuningham.com

Consultant

RANDALL LAMB
4757 Palm Avenue
La Mesa, CA 91942
(619) 713-5700

Revisions

No.	Date	Description

REGISTERED PROFESSIONAL ENGINEER — KEITH W. LOCKE — No. 17238 — ELECTRICAL — STATE OF CALIFORNIA

1/11/2018
RL #SD17238.00

Document Phase:	Backcheck 1
Date:	MAY 24th, 2018
PIC / AIC:	-
Drawn By:	-
Checked By:	-
Comm. No.:	-

Project Title

TCMC PARKING STRUCTURE AND MAIN ENTRY

Sheet Title

ELECTRICAL SITE PLAN

Sheet Number

E3.1

2018.05.29 BIDSET

Copyright©2017by Cuningham Group Architecture, Inc. (All Rights Reserved)



GENERAL NOTES

1. COORDINATE LOCATION OF DEVICES WITH ARCHITECTURAL FLOOR PLAN AND INTERIOR ELEVATIONS.

KEYNOTES

1. X-POINT WIRELESS LIGHTING CONTROL XPA POE BRIDGE.
2. UP TO X-POINT WIRELESS LIGHTING CONTROL XPA POE BRIDGE AT 2ND FLOOR.

PRIMARY DAYLIT ZONE

SECONDARY DAYLIT ZONE

1 GROUND FLOOR LIGHTING PLAN

SCALE: 1/16" = 1'-0"

NORTH

CUNINGHAM GROUP

Cuningham Group Architecture, Inc.

1030 G Street
San Diego, CA 92101

Tel: 619 849 1080
Fax: 619 849 1069

www.cuningham.com

Consultant

RANDALL LAMB
4757 Palm Avenue
La Mesa, CA 91942
(619) 713-5700

Revisions

No.	Date	Description

REGISTERED PROFESSIONAL ENGINEER STATE OF CALIFORNIA ELECTRICAL

1/11/2018
RL #SD17238.00

Document Phase:	Backcheck 1
Date:	MAY 24th, 2018
PIC / AIC:	-
Drawn By:	-
Checked By:	-
Comm. No.:	-

Project Title

TCMC PARKING STRUCTURE AND MAIN ENTRY

2018.05.29 BIDSET

Sheet Title

GROUND FLOOR LIGHTING PLAN

Sheet Number

E4.1

Copyright©2017by Cuningham Group Architecture, Inc. (All Rights Reserved)

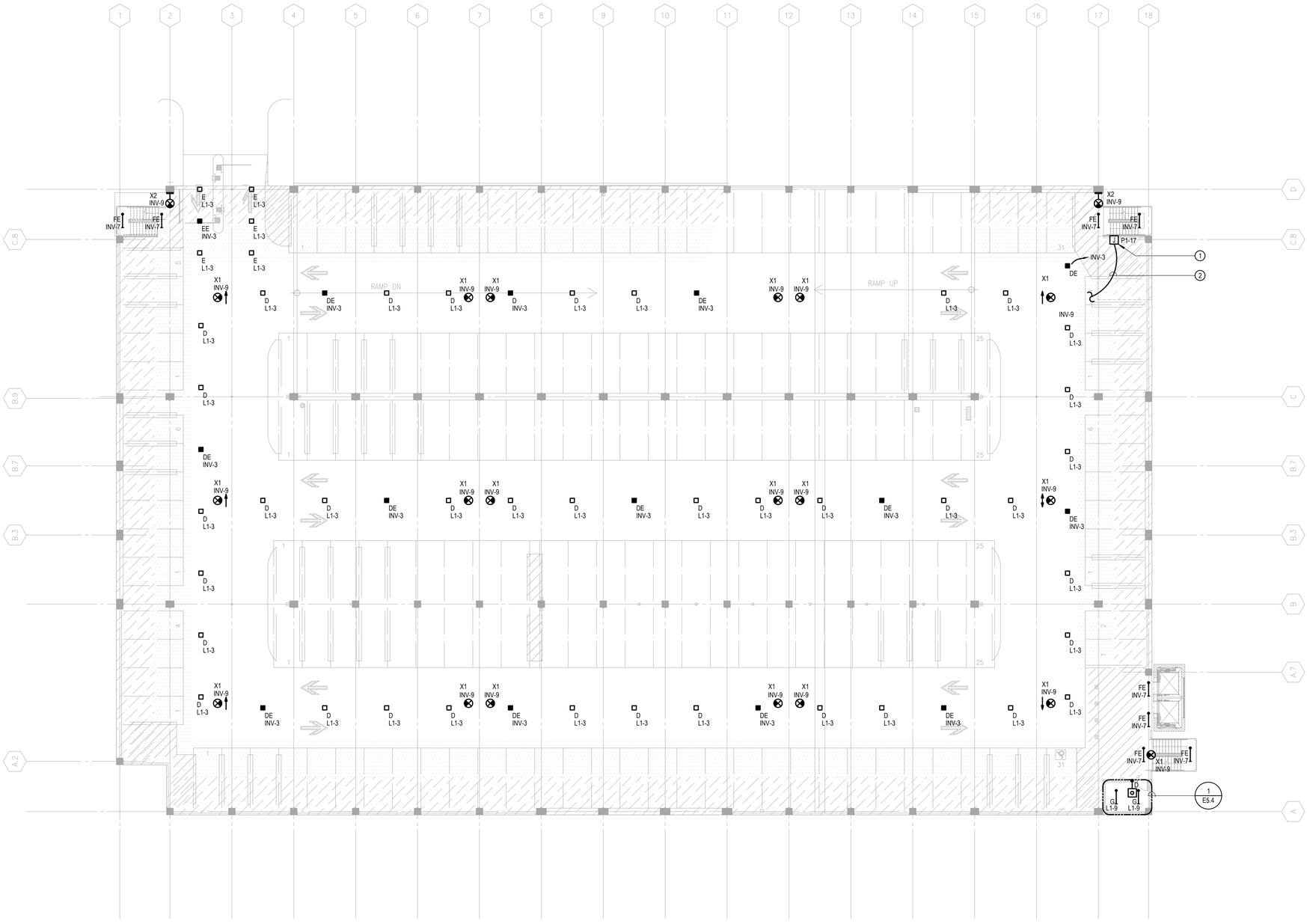

GENERAL NOTE

1. COORDINATE LOCATION OF DEVICES WITH ARCHITECTURAL FLOOR PLANS AND INTERIOR ELEVATIONS.

KEYNOTES

1. X-POINT WIRELESS LIGHTING CONTROL XPA POE BRIDGE.
2. UP TO X-POINT WIRELESS LIGHTING CONTROL XPA POE BRIDGE AT 2ND FLOOR.

PRIMARY DAYLIT ZONE

SECONDARY DAYLIT ZONE

1 2ND FLOOR LIGHTING PLAN

SCALE: 1/16" = 1'-0"

NORTH

CUNINGHAM GROUP

Cuningham Group Architecture, Inc.

1030 G Street
San Diego, CA 92101

Tel: 619 849 1080
Fax: 619 849 1089

www.cuningham.com

Consultant

RANDALL LAMB
4757 Palm Avenue
La Mesa, CA 91942
(619) 713-5700

Revisions

No.	Date	Description

REGISTERED PROFESSIONAL ENGINEER — ELECTRICAL — STATE OF CALIFORNIA

1/11/2018
RL #SD17238.00

Document Phase:	Backcheck 1
Date:	MAY 24th, 2018
PIC / AIC:	-
Drawn By:	-
Checked By:	-
Comm. No.:	-

Project Title

TCMC PARKING STRUCTURE AND MAIN ENTRY

Sheet Title

2ND FLOOR LIGHTING PLAN

Sheet Number

E4.2

2018.05.29 BIDSET

Copyright©2017by Cuningham Group Architecture, Inc. (All Rights Reserved)

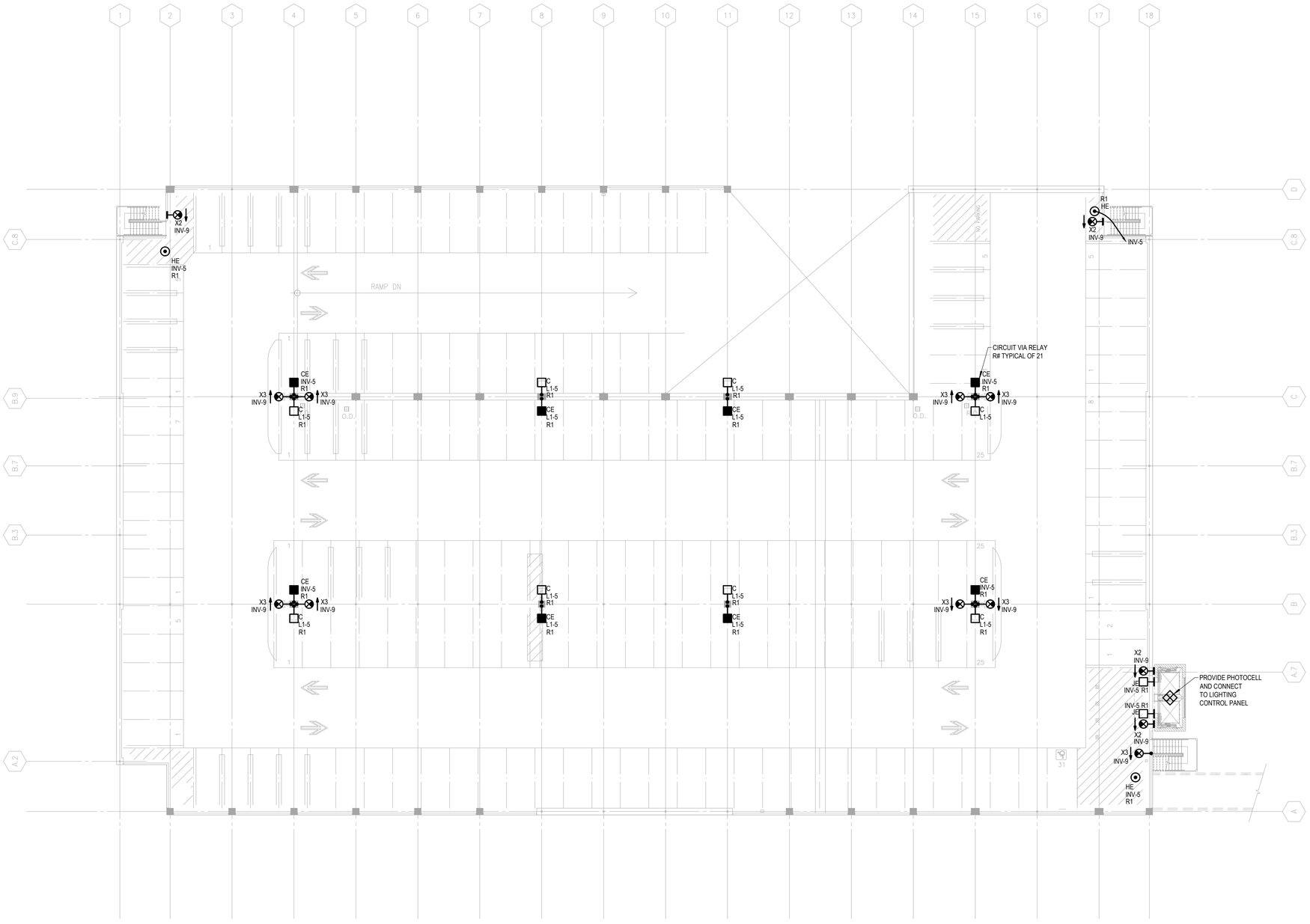

1 ROOF LIGHTING PLAN

SCALE: 1/16" = 1'-0"

NORTH

GENERAL NOTES

1. COORDINATE LOCATION OF DEVICES WITH ARCHITECTURAL PLANS AND INTERIOR ELEVATIONS.

Cuningham Group Architecture, Inc.

1030 G Street
San Diego, CA 92101

Tel: 619 849 1080
Fax: 619 849 1069

www.cuningham.com

Consultant

RANDALL LAMB
4757 Palm Avenue
La Mesa, CA 91942
(619) 713-5700

Revisions

No.	Date	Description

REGISTERED PROFESSIONAL ENGINEER — ELECTRICAL — STATE OF CALIFORNIA

1/11/2018
RL #SD17238.00

Document Phase:	Backcheck 1
Date:	MAY 24th, 2018
PIC / AIC:	-
Drawn By:	-
Checked By:	-
Comm. No.:	-

Project Title

TCMC PARKING STRUCTURE AND MAIN ENTRY

Sheet Title

ROOF LIGHTING PLAN

Sheet Number

E4.3

2018.05.29 BIDSET

Copyright©2017by Cuningham Group Architecture, Inc. (All Rights Reserved)

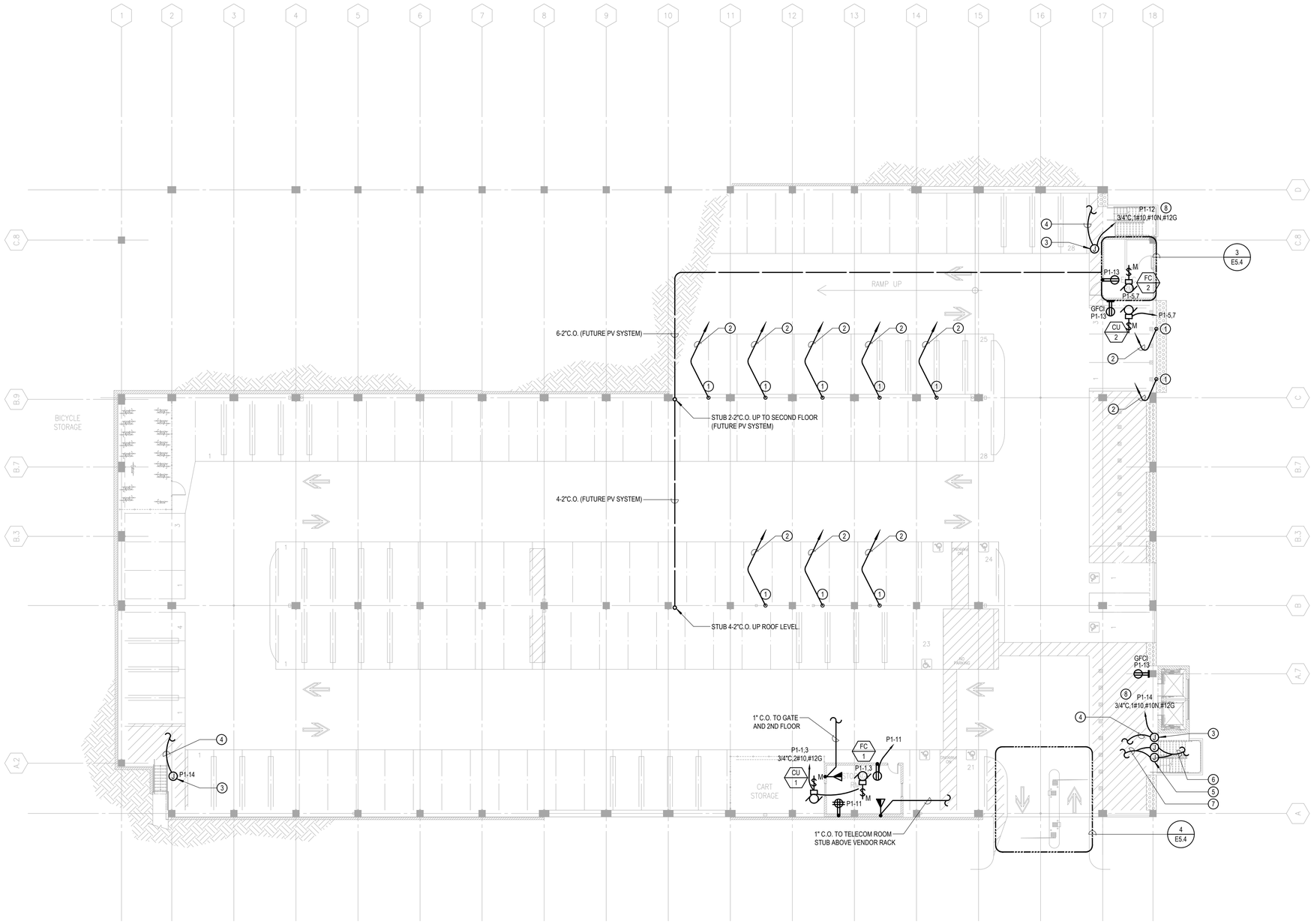

1 GROUND FLOOR POWER & SIGNAL PLAN

SCALE: 1/16" = 1'-0"

NORTH

GENERAL NOTES

1. COORDINATE LOCATION OF DEVICES WITH ARCHITECTURAL FLOOR PLANS AND INTERIOR ELEVATIONS.
2. REFER TO SECURITY DRAWINGS FOR ADDITIONAL CONDUIT AND LOW VOLTAGE CABLING REQUIREMENTS.

KEYNOTES

1. PROVIDE RACEWAY SYSTEM FOR FUTURE EV CHARGING STATION.
2. PROVIDE 3/4" CONDUIT ONLY FOR FUTURE EV CHARGING STATION. STUB-UP CONDUIT IN ELECTRICAL ROOM AT EVC PANEL.
3. CONNECT TO EMERGENCY PHONE COORDINATE EXACT LOCATION AND CONNECTION REQUIREMENTS WITH SECURITY DRAWINGS AND ARCHITECTURAL PLANS DETAIL 4/A4.02.
4. BRANCH CIRCUIT INV-6, 3/4" C. UP TO EMERGENCY PHONE AT SECOND FLOOR.
5. FLOOR MOUNTED JUNCTION BOX AND RACEWAYS FOR FUTURE PAY-ON-FOOT MACHINE. COORDINATE LOCATIONS WITH ARCHITECTURAL PLANS DETAIL 1/A4.01.
6. (1) 3/4" C.O. TO PANEL "P1" AND (1) 1" C.O. TO TELCOM ROOM STUBBED UP AT BACKBOARD.
7. 3/4" C.O. POWER AND 1" TELCOM/DATA UP TO 2ND. FLOOR FOR FUTURE PAY-ON-FOOT MACHINE.
8. UTILIZE #10 CONDUCTORS THROUGH OUT BRANCH CIRCUIT.

CUNINGHAM GROUP

Cuningham Group Architecture, Inc.

1030 G Street
San Diego, CA 92101

Tel: 619 849 1080
Fax: 619 849 1069

www.cuningham.com

Consultant

RANDALL LAMB
4757 Palm Avenue
La Mesa, CA 91942
(619) 713-5700

Revisions

No.	Date	Description

REGISTERED PROFESSIONAL ENGINEER — ELECTRICAL — STATE OF CALIFORNIA

1/11/2018
RL #SD17238.00

Document Phase:	Backcheck 1
Date:	MAY 24th, 2018
PIC / AIC:	-
Drawn By:	-
Checked By:	-
Comm. No.:	-

Project Title

TCMC PARKING STRUCTURE AND MAIN ENTRY

2018.05.29 BIDSET

Sheet Title

GROUND FLOOR POWER & SIGNAL PLAN

Sheet Number

E5.1

Copyright©2017by Cuningham Group Architecture, Inc. (All Rights Reserved)

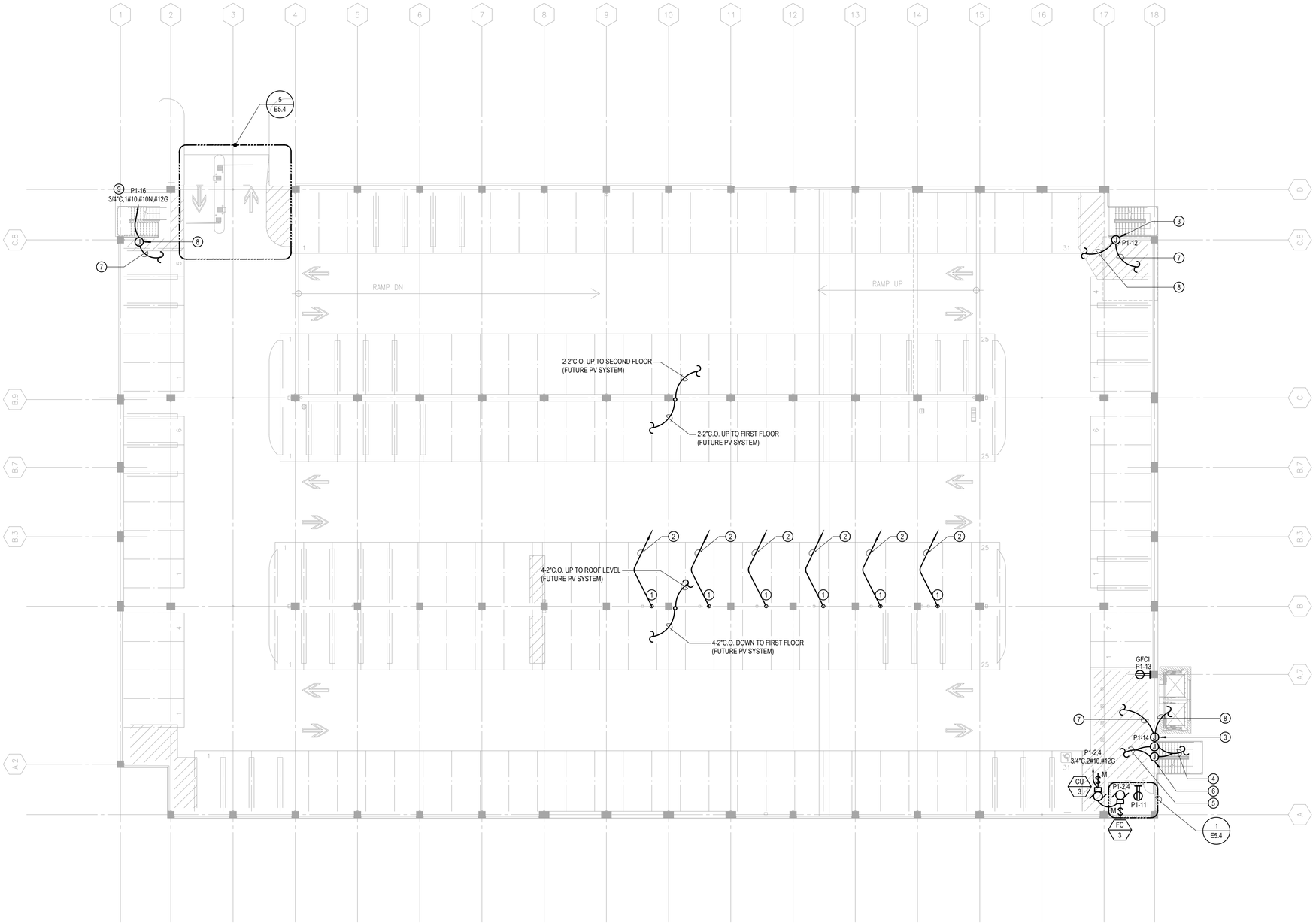

GENERAL NOTE

1. COORDINATE LOCATION OF DEVICES WITH ARCHITECTURAL FLOOR PLANS AND INTERIOR ELEVATIONS.
2. REFER TO SECURITY DRAWINGS FOR ADDITIONAL CONDUIT AND LOW VOLTAGE CABLING REQUIREMENTS.

KEYNOTES

1. PROVIDE RACEWAY SYSTEM FOR FUTURE EV CHARGING STATION.
2. PROVIDE 3/4" CONDUIT ONLY FOR FUTURE EV CHARGING STATION. STUB-UP CONDUIT IN ELECTRICAL ROOM AT EVC PANEL.
3. CONNECT TO EMERGENCY PHONE COORDINATE EXACT LOCATION AND CONNECTION REQUIREMENTS WITH SECURITY DRAWINGS AND ARCHITECTURAL DETAIL 4/A4.02.
4. 3/4" C.O. POWER AND 1" TELCOM/DATA UP TO ROOF FOR PAY-ON-FOOT MACHINE. SEE ARCHITECTURAL DETAILS 1/A4.01 AND 2/A4.01.
5. 3/4" C.O. POWER AND 1" TELCOM/DATA UP TO GROUND FLOOR FOR PAY-ON-FOOT MACHINE. SEE ARCHITECTURAL DETAILS 1/A4.01 AND 2/A4.01.
6. FLOOR MOUNTED JUNCTION BOX/POKE THROUGH DEVICE FOR FUTURE PAY-ON-FOOT MACHINE. COORDINATE LOCATION WITH ARCHITECTURAL PLANS 1/A4.01.
7. BRANCH CIRCUIT INV-6 UP TO ROOF FOR CONNECTION TO EMERGENCY PHONE.
8. BRANCH CIRCUIT INV-6 DOWN TO GROUND FLOOR FOR CONNECTION TO EMERGENCY PHONE.
9. UTILIZE #10 CONDUCTORS THROUGHOUT BRANCH CIRCUIT.

1 2ND FLOOR POWER & SIGNAL PLAN

SCALE: 1/16" = 1'-0"

NORTH

CUNINGHAM GROUP

Cuningham Group Architecture, Inc.

1030 G Street
San Diego, CA 92101

Tel: 619 849 1080
Fax: 619 849 1069

www.cuningham.com

Consultant

RANDALL LAMB
4757 Palm Avenue
La Mesa, CA 91942
(619) 713-5700

Revisions

No.	Date	Description

REGISTERED PROFESSIONAL ENGINEER KURT E. HOLMES ELECTRICAL STATE OF CALIFORNIA

1/11/2018
RL #SD17238.00

Document Phase:	Backcheck 1
Date:	MAY 24th, 2018
PIC / AIC:	-
Drawn By:	-
Checked By:	-
Comm. No.:	-

Project Title

TCMC PARKING STRUCTURE AND MAIN ENTRY

Sheet Title

2ND FLOOR POWER & SIGNAL PLAN

Sheet Number

E5.2

2018.05.29 BIDSET

Copyright©2017by Cuningham Group Architecture, Inc. (All Rights Reserved)

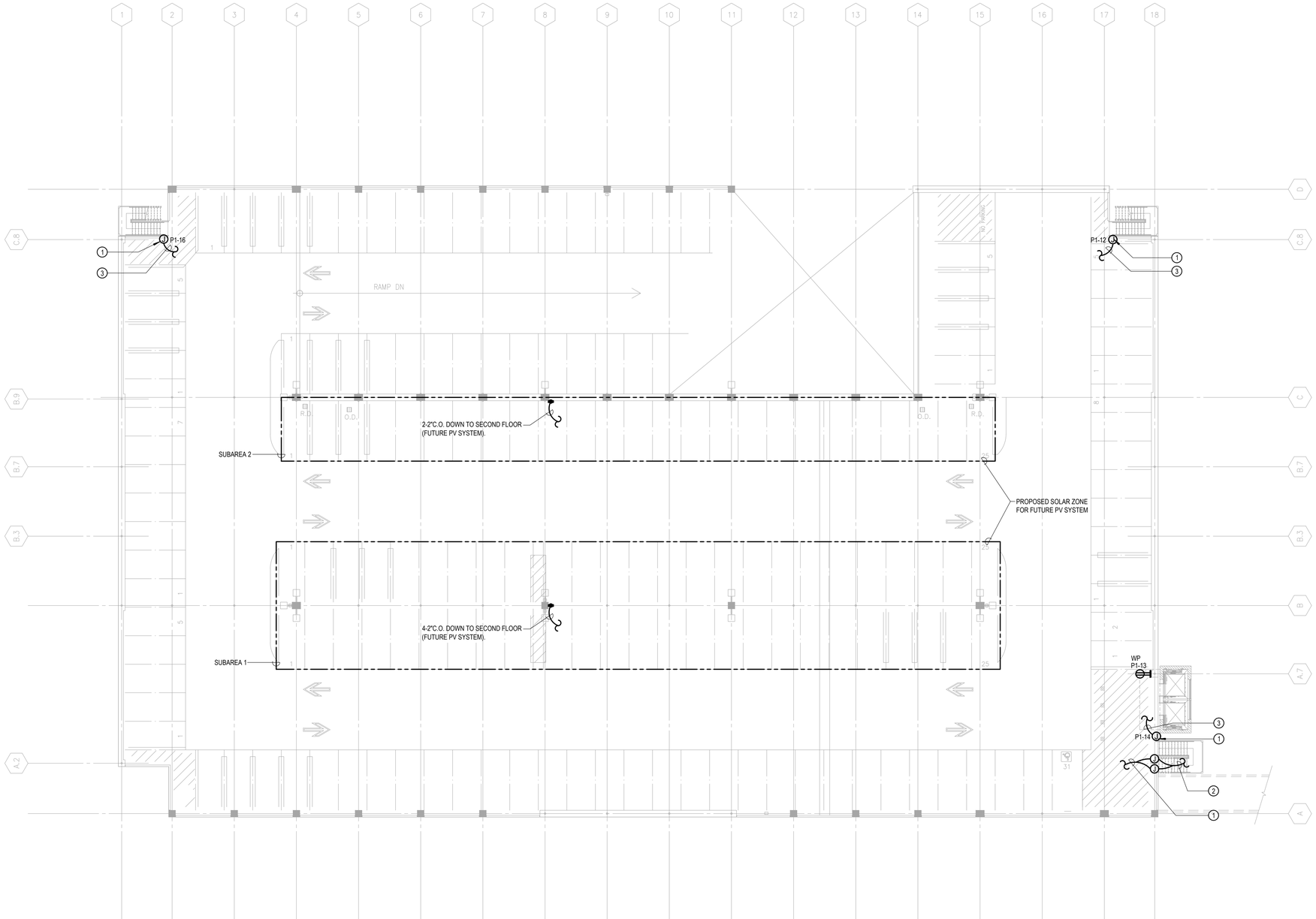

1 ROOF POWER & SIGNAL PLAN

SCALE: 1/16" = 1'-0"

NORTH

GENERAL NOTES

1. COORDINATE LOCATION OF DEVICESWITH ARCHITECTURAL FLOOR PLANS AND INTERIOR ELEVATIONS.
2. REFERENCE SECURITY DRAWINGS FOR ADDITIONAL CONDUIT AND CABLING REQUIREMENTS.

KEYNOTES

1. JUNCTION BOX/POKE THROUGH DEVICE AND ASSOCIATED RACEWAYS FOR FUTURE PAY-ON-FOOT MACHINE. COORDINATE LOCATION WITH ARCHITECTURAL DETAIL 1/A4.01.
2. 3/4" C.O. POWER AND 1" C.O. TEL/DATA DOWN TO 2ND. FLOOR FOR PAY-ON-FOOT MACHINE. SEE DETAIL 1/A4.01.
3. BRANCH CIRCUIT INV-6, 3/4" C/ DOWN TO 2ND. FLOOR EMERGENCY PHONE. SEE ARCHITECTURAL DETAIL 4/A4.02.

CUNINGHAM GROUP

Cuningham Group Architecture, Inc.

1030 G Street
San Diego, CA 92101

Tel: 619 849 1080
Fax: 619 849 1089

www.cuningham.com

Consultant

RANDALL LAMB
4757 Palm Avenue
La Mesa, CA 91942
(619) 713-5700

Revisions

No.	Date	Description

REGISTERED PROFESSIONAL ENGINEER
ELECTRICAL
STATE OF CALIFORNIA

1/11/2018
RL #SD17238.00

Document Phase:	Backcheck 1
Date:	MAY 24th, 2018
PIC / AIC:	-
Drawn By:	-
Checked By:	-
Comm. No.:	-

Project Title

TCMC PARKING STRUCTURE AND MAIN ENTRY

Sheet Title

ROOF POWER & SIGNAL PLAN

Sheet Number

E5.3

2018.05.29 BIDSET

Copyright©2017by Cuningham Group Architecture, Inc. (All Rights Reserved)

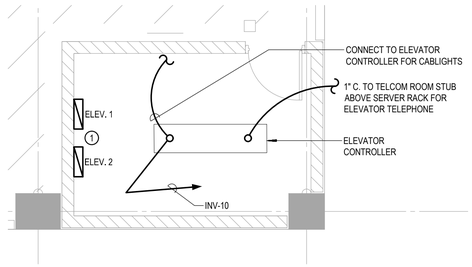

KEYNOTES

1. PROVIDE SHUNT TRIP ENCLOSED CIRCUIT BREAKER FOR ELEVATOR 1 & 2. CONNECT TO ELEVATOR CONTROLLER COORDINATE INSTALLATION AND SHUNT TRIP INTERFACE WITH ELEVATOR CONTRACTOR/VENDOR.

1 ENLARGED ELEV. CONTROL ROOM PLAN

SCALE: 1/4" = 1'-0"

NORTH

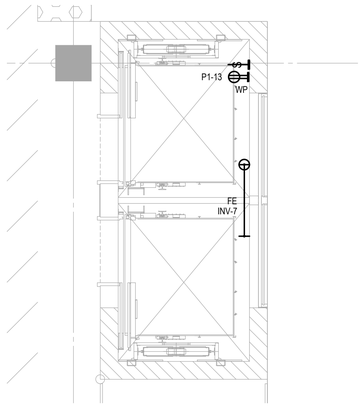

2 ENLARGED ELEVATOR PIT PLAN

SCALE: 1/4" = 1'-0"

NORTH

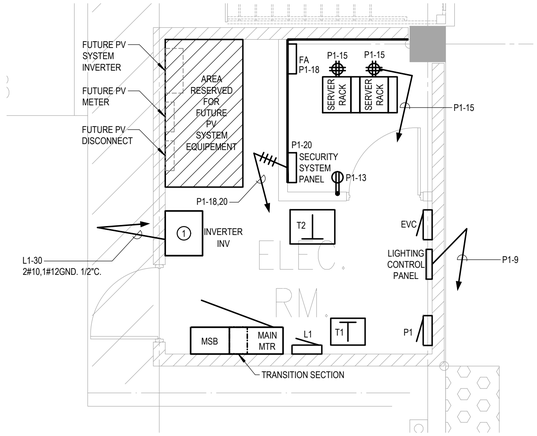

KEYNOTES

1. EMERGENCY LIGHTING INVERTER. EQUAL TO MYERS POWER PRODUCTS ILLUMINATOR SERIES "E"
   - 277V OUTPUT
   - 5.0 KVA RATING
   - STANDARD VRLA BATTERY
   - 90 MIN RUNTIME
   - (10) 20AMP 1 POLE OUTPUT CIRCUIT BREAKER
   - FACTORY START-UP 2 YEARS EXTENDED WARRANTY

3 ENLARGED ELECTRICAL ROOM PLAN

SCALE: 1/4" = 1'-0"

NORTH

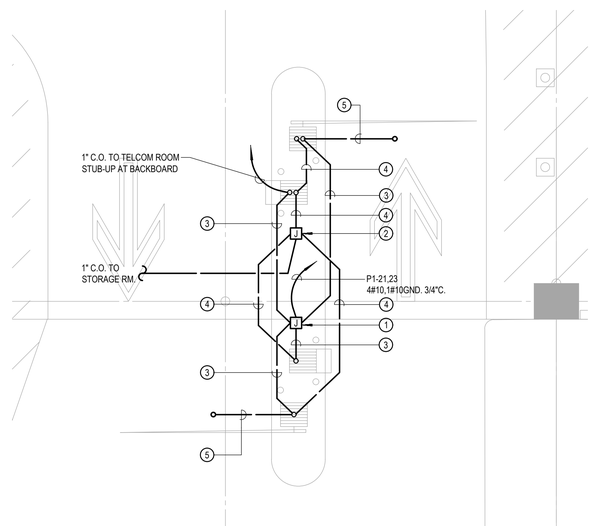

GENERAL NOTES

1. COORDINATE INSTALLATION WITH ARCHITECTURAL DETAIL SHEET A8.01 AND ACCESS GATE INSTALLATION CONTRACTOR.

KEYNOTES

1. IN GROUND JUNCTION BOX FOR POWER TO GATE CONTROLLERS.
2. IN GROUND JUNCTION BOX FOR DATA/VOICE CONNECTION TO GATE CONTROLLER.
3. 2#10, 1#10GND. 3/4"C.
4. 1" C. FOR VOICE/DATA CONNECTION.
5. 1/2" C. FOR LOOP DETECTOR CABLE.

4 ENLARGED SOUTH ENTRANCE PLAN

SCALE: 1/4" = 1'-0"

NORTH

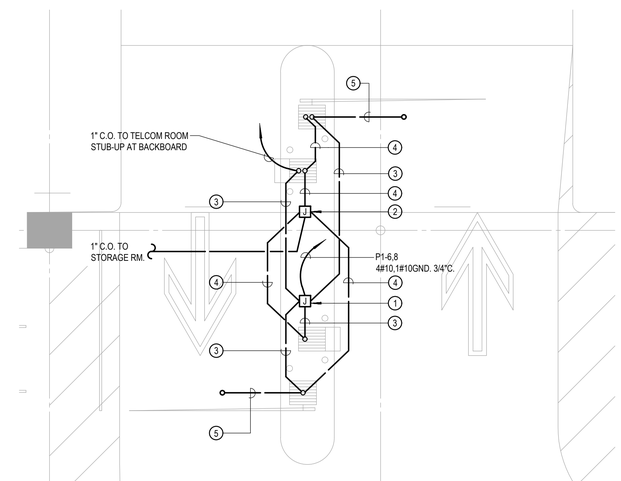

GENERAL NOTES

1. COORDINATE INSTALLATION WITH ARCHITECTURAL DETAIL SHEET A8.01 AND ACCESS GATE INSTALLATION CONTRACTOR.

KEYNOTES

1. IN GROUND JUNCTION BOX FOR POWER TO GATE CONTROLLERS.
2. IN GROUND JUNCTION BOX FOR DATA/VOICE CONNECTION TO GATE CONTROLLER.
3. 2#10, 1#10GND. 3/4"C.
4. 1" C. FOR VOICE/DATA CONNECTION.
5. 1/2" C. FOR LOOP DETECTOR CABLE.

5 ENLARGED NORTH ENTRANCE PLAN

SCALE: 1/4" = 1'-0"

NORTH

2018.05.29 BIDSET

CUNINGHAM GROUP

Cuningham Group Architecture, Inc.
1030 G Street
San Diego, CA 92101
Tel: 619 849 1080
Fax: 619 849 1089
www.cuningham.com

Consultant

RANDALL LAMB
4757 Palm Avenue
La Mesa, CA 91942
(619) 713-5700

Revisions

No.	Date	Description



1/11/2018
RL #SD17238.00

Document Phase:	Backcheck 1
Date:	MAY 24th, 2018
PIC / AIC:	-
Drawn By:	-
Checked By:	-
Comm. No.:	-

Project Title

TCMC PARKING STRUCTURE AND MAIN ENTRY

Sheet Title

ELECTRICAL ENLARGED PLANS

Sheet Number

E5.4

Copyright © 2017 by Cuningham Group Architecture, Inc. (All Rights Reserved)

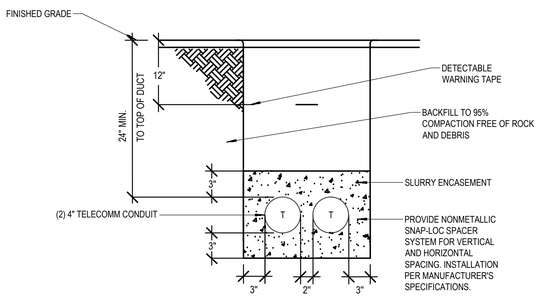

1 TELECOMMUNICATION CONDUIT DUCT BANK

NOT TO SCALE

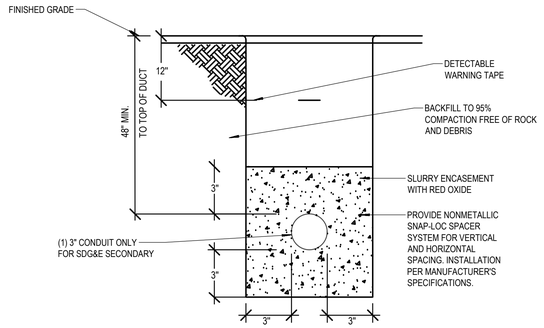

2 SDG&E SECONDARY DUCT BANK

NOT TO SCALE

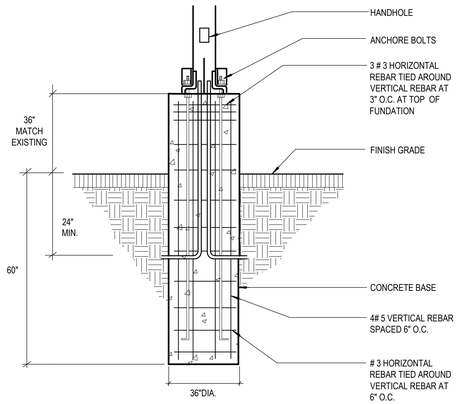

3 TYPICAL LIGHT POLE FOUNDATION DETAIL

NOT TO SCALE

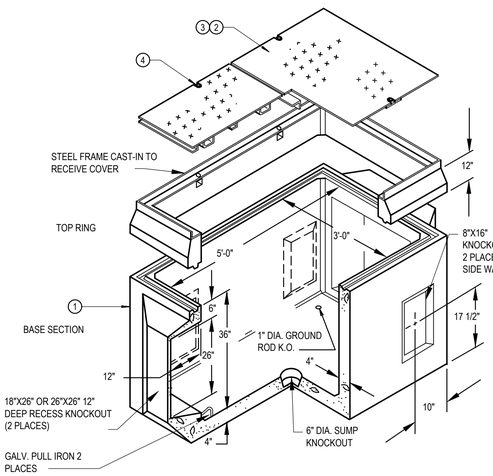

NOTES

1. PRECAST 3'-0" X 5'-0" CONCRETE HANDHOLE MEETING CALTRANS STANDARDS
2. H-20 TRAFFIC COVER IN PAVED AREAS OR POLYMER CONCRETE COVER FOR PARKWAY LOADING IN UNPAVED AREAS.
3. UTILITY IDENTIFICATION TO READ "DATA", "FIRE ALARM", OR "TELEPHONE" ON TOP OF COVER.
4. PENTAHEAD STAINLESS STEEL BOLTS (4 REQUIRED). CONTRACTOR TO PROVIDE MINUMUM OF 6 WRENCHES TO FIT PENTAHEAD BOLTS.

4 TYPICAL HAND HOLE DETAIL

NOT TO SCALE

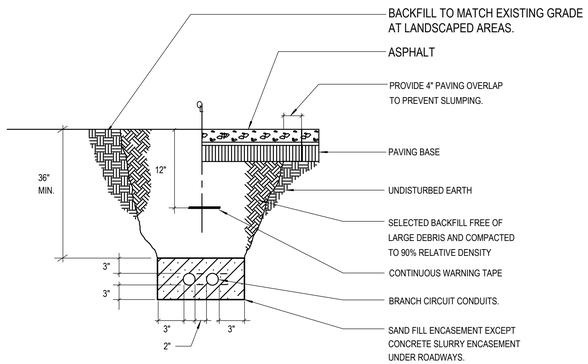

5 TYPICAL TRENCH SECTION FOR BRANCH CIRCUIT

NOT TO SCALE

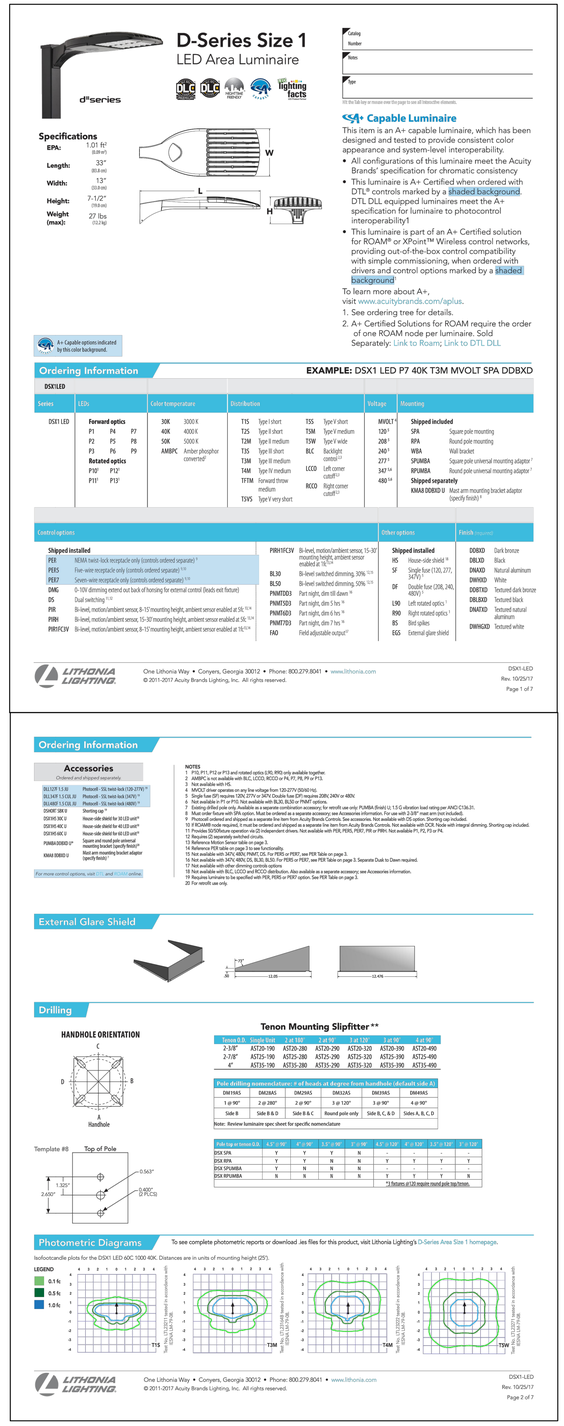

D-Series Size 1

LED Area Luminaire

Catalog Number
Notes
Type

Hit the tab key or mouse over this page to see all interactive elements.

Specifications

EPA: 1.01 ft² (0.09 m²)
Length: 33" (83.8 cm)
Width: 13" (33.0 cm)
Height: 7-1/2" (19.0 cm)
Weight (max): 27 lbs (12.2 kg)

A+ Capable Luminaire

This item is an A+ capable luminaire, which has been designed and tested to provide consistent color appearance and system-level interoperability.

- All configurations of this luminaire meet the Acuity Brands' specification for chromatic consistency
- This luminaire is A+ Certified when ordered with DTL® controls marked by a shaded background. DTL DLL equipped luminaires meet the A+ specification for luminaire to photocontrol interoperability1
- This luminaire is part of an A+ Certified solution for ROAM® or XPoint™ Wireless control networks, providing out-of-the-box control compatibility with simple commissioning, when ordered with drivers and control options marked by a shaded background

To learn more about A+, visit www.acuitybrands.com/aplus.

1. See ordering tree for details.
2. A+ Certified Solutions for ROAM require the order of one ROAM node per luminaire. Sold Separately: Link to Roam; Link to DTL DLL

A+ Capable options indicated by this color background.

Ordering Information

EXAMPLE: DSX1 LED P7 40K T3M MVOLT SPA DDBXD

DSX1LED																							
Series	**LEDs**				**Color temperature**		**Distribution**								**Voltage**	**Mounting**							
DSX1 LED	**Forward optics**				30K	3000 K	T1S	Type I short		T5S	Type V short				MVOLT	120[1]	**Shipped included**						
	P1	P4	P7		40K	4000 K	T2S	Type II short		T5M	Type V medium				277	277[1]	SPA	Square pole mounting					
	P2	P5	P8		50K	5000 K	T2M	Type II medium		T5W	Type V wide				208	208[1]	RPA	Round pole mounting					
	P3	P6	P9		AMBPC	Amber phosphor converted[2]	T3S	Type III short		BLC	Backlight control[3,4]				240	240[1]	WBA	Wall bracket					
	Rotated optics						T3M	Type III medium		LCCO	Left corner cutoff[3,4]				347	347[1,5]	SPUMBA	Square pole universal mounting adaptor[7]					
	P3R[2]	P12[2]					T4M	Type IV medium		RCCO	Right corner cutoff[3,4]				480	480[1,6]	RPUMBA	Round pole universal mounting adaptor[7]					
	P11[2]	P13[2]					TFTM	Forward throw medium									**Shipped separately**						
							T5VS	Type V very short									KMA8 DDBXD U	Mast arm mounting bracket adaptor (specify finish)[8]					

Control options				**Other options**		**Finish** (required)	
Shipped installed		PIRH1FCSV	Bi-level, motion/ambient sensor, 15-30' mounting height, ambient sensor enabled at 1fc[9,10,11]	**Shipped installed**		DDBXD	Dark bronze
PE	NEMA twist-lock receptacle only (controls ordered separately)[9]			HS	House-side shield[18]	DBLXD	Black
PER5	Five-wire receptacle only (controls ordered separate)[9,11]	BL30	Bi-level switched dimming, 30%[9,10]	SF	Single fuse (120, 277, 347V)[1]	DNAXD	Natural aluminum
PER7	Seven-wire receptacle only (controls ordered separate)[9,10]	BL50	Bi-level switched dimming, 50%[9,10]	DF	Double fuse (208, 240, 480V)[1]	DWHXD	White
DMG	0-10V dimming extend out back of housing for external control (leads exit fixture)	PIRHTDD3	Part night, dim till dawn[10]			DDBTXD	Textured dark bronze
DS	Dual switching[12,13]	PIRHTSD3	Part night, dim 5 hrs[10]	L90	Left rotated optics[1]	DBLBXD	Textured black
PIR	Bi-level, motion/ambient sensor, 8-15' mounting height, ambient sensor enabled at 5fc[10,14]	PIRHTDD3	Part night, dim 6 hrs[10]	R90	Right rotated optics[1]	DNATXD	Textured natural aluminum
PIRH	Bi-level, motion/ambient sensor, 15-30' mounting height, ambient sensor enabled at 5fc[10,14]	PIRHTFD3	Part night, dim 7 hrs[10]	BS	Bird spikes	DWHGXD	Textured white
PIRH1FCSV	Bi-level, motion/ambient sensor, 8-15' mounting height, ambient sensor enabled at 1fc[9,10,14]	FAO	Field adjustable output[17]	EGS	External glare shield		

Accessories

Ordered and shipped separately.

DLL127F 1.5 SI	Photocell - SSL twist-lock (120-277V)[15]
DLL347F 1.5 CUL SI	Photocell - SSL twist-lock (347V)[15]
DLL480F 1.5 CUL SI	Photocell - SSL twist-lock (480V)[15]
DSHS/SCM 0	Shorting cap[16]
DSX1HS 30C U	House-side shield for 30 LED unit[18]
DSX1HS 40C U	House-side shield for 40 LED unit[18]
DSX1HS 60C U	House-side shield for 60 LED unit[18]
PUMBA DDBXD U[8]	Square and round pole universal mounting bracket (specify finish)[8]
KMA8 DDBXD U	Mast arm mounting bracket adaptor (specify finish)[8]

For more control options, visit DTL and ROAM online.

NOTES

1. P10, P11, P12 or P13 and rotated optics (L90, R90) only available together.
2. AMBPC is not available with BLC, LCCO, RCCO or P4, P7, P8, P9 or P13.
3. Not available with HS.
4. MVOLT driver operates on any line voltage from 120-277V (50/60 Hz).
5. Single fuse (SF) requires 120V, 277V or 347V. Double fuse (DF) requires 208V, 240V or 480V.
6. Not available in P1 or P10. Not available with BL30, BL50 or PNMT options.
7. Existing drilled pole only. Available as a separate combination accessory; for retrofit use only. PUMBA (finish) U; 1.5 G vibration load rating per ANSI C136.31.
8. Must order fixture with SPA option. Must be ordered as a separate accessory; see Accessories information. For use with 2-3/8" mast arm (not included).
9. Photocell ordered and shipped as a separate line item from Acuity Brands Controls. See accessories. Not available with CS option. Shorting cap included.
10. If HOA/ISR mode required, it must be ordered and shipped as a separate line item from Acuity Brands Controls. Not available with OCR. Node with integral dimming. Shorting cap included.
11. Reference PER table on page 3 to see functionality. Not available with dimming drivers. Not available with P5R, P5RT, P8 or P8H. Not available P1, P5, P5 or P4.
12. Requires (2) separately switched circuits.
13. Reference Motion Sensor table on page 3.
14. Reference PER table on page 3 to see functionality.
15. Not available with 347V, 480V, PNMT, DS. For PER5 or P5RT, see PER Table on page 3.
16. Not available with HS, PIR, PIRH, PIRH1FC3V, PER5 or P5RT, see PER Table on page 3. Separate Dusk to Dawn required.
17. Not available with DS, PER5 or P5RT.
18. Not available with BLC, LCCO and RCCO distribution. Also available as a separate accessory; see Accessories information.
19. Requires luminaire to be specified with P5R, P5RS or P5RT option. See PER Table on page 3.
20. For retrofit use only.

External Glare Shield

Drilling

HANDHOLE ORIENTATION

Tenon Mounting Slipfitter**

Tenon O.D.	Single Unit	1 at 180°	2 at 90°	2 at 180°	3 at 90°	4 at 90°
	C					
2-3/8"	AST20-190	AST20-280	AST20-290	AST20-320	AST20-390	AST20-490
2-7/8"	AST25-190	AST25-280	AST25-290	AST25-320	AST25-390	AST25-490
4"	AST35-190	AST35-280	AST35-290	AST35-320	AST35-390	AST35-490

Pole drilling nomenclature: # of heads at degree from handhole (default side A):

DM19AS	DM28AS	DM29AS	DM32AS	DM39AS	DM49AS
1 @ 90°	2 @ 390°	2 @ 90°	3 @ 120°	3 @ 90°	4 @ 90°
Side B	Side B & D	Side B & C	Round pole only	Side B, C, & D	Sides A, B, C, D

Note: Review luminaire spec sheet for specific nomenclature

Pole top or tenon O.D.	4.5" @ 90°	4" @ 90°	3.5" @ 90°	3" @ 90°	4.5" @ 120°	4" @ 120°	3.5" @ 120°	3" @ 120°
DSX SPA	Y	Y	Y	N	-	-	-	-
DSX RPA	Y	Y	N	N	Y	Y	Y	Y
DSX SPUMBA	Y	N	N	N	-	-	-	-
DSX RPUMBA	N	N	N	N	Y	Y	Y	N

** Fixtures at 120 require round pole top tenons.

Template #8

Photometric Diagrams

To see complete photometric reports or download .ies files for this product, visit Lithonia Lighting's D-Series Area Size 1 homepage.

Isofootcandle plots for the DSX1 LED 60C 1000 40K. Distances are in units of mounting height (25').

LEGEND: 0.1 fc, 0.5 fc, 1.0 fc

© 2011-2017 Acuity Brands Lighting, Inc. All rights reserved.

© 2011-2017 Acuity Brands Lighting, Inc. All rights reserved.

6 TYPICAL LIGHTING FIXTURE TYPE A, B, C & CE

NOT TO SCALE

CUNINGHAM GROUP

Cuningham Group Architecture, Inc.

1030 G Street
San Diego, CA 92101

Tel: 619 849 1080
Fax: 619 849 1089

www.cuningham.com

Consultant

RANDALL LAMB
4757 Palm Avenue
La Mesa, CA 91942
(619) 713-5700

Revisions

No.	Date	Description

REGISTERED PROFESSIONAL ENGINEER KURT W. ANDERSON ELECTRICAL STATE OF CALIFORNIA

1/11/2018
RL #SD17238.00

Document Phase:	Backcheck 1
Date:	MAY 24th, 2018
PIC / A/C:	-
Drawn By:	-
Checked By:	-
Comm. No.:	-

Project Title

TCMC PARKING STRUCTURE AND MAIN ENTRY

Sheet Title

ELECTRICAL DETAILS

Sheet Number

E6.1

2018.05.29 BIDSET

Copyright©2017by Cuningham Group Architecture, Inc. (All Rights Reserved)

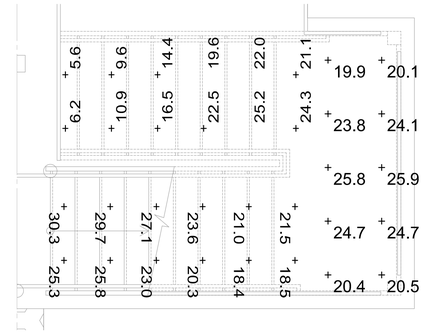

2 ENLARGED PHOTOMETRIC STAIRS PLAN

SCALE: 3/8" = 1'-0"

NORTH

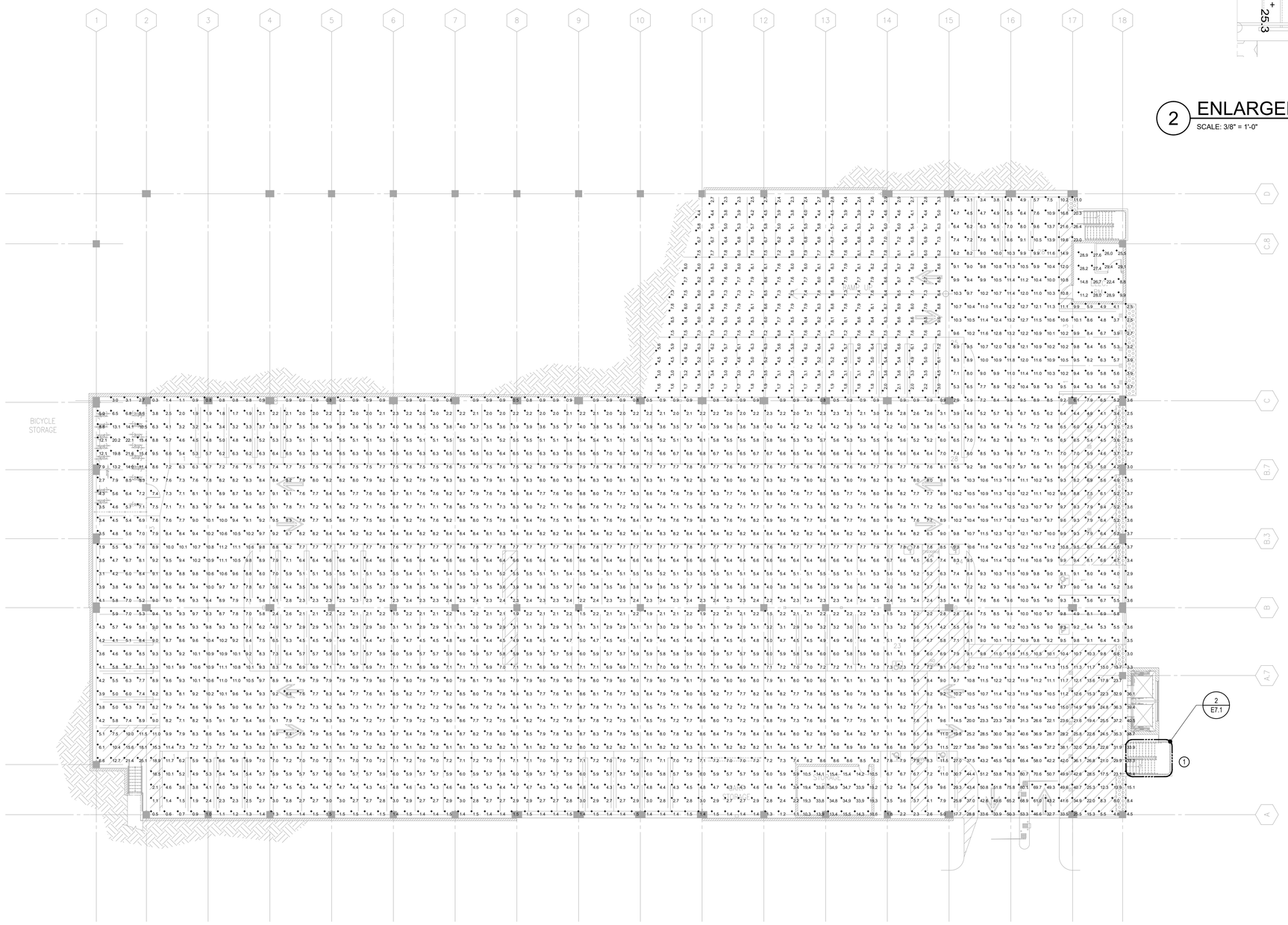

1 GROUND FLOOR PHOTOMETRIC PLAN

SCALE: 1'-0" = 1/16"

NORTH

GENERAL NOTES

1. REFER TO SHEET E0.1 FOR ABBREVIATIONS, SYMBOLS AND ADDITIONAL NOTES.

KEYNOTES

1 LIGHTING PHOTOMETRIC CALCULATION IS TYPICAL FOR STAIRWAYS INTERMEDIATE LANDING.

CUNINGHAM GROUP

Cuningham Group Architecture, Inc.

1030 G Street
San Diego, CA 92101

Tel: 619 849 1080
Fax: 619 849 1069

www.cuningham.com

Consultant

RANDALL LAMB
4757 Palm Avenue
La Mesa, CA 91942
(619) 713-5700

Revisions

No.	Date	Description

REGISTERED PROFESSIONAL ENGINEER — KURT E. HOLMBOE — No. E-17238 — ELECTRICAL — STATE OF CALIFORNIA

1/11/2018
RL #SD17238.00

Document Phase:	Backcheck 1
Date:	MAY 24th, 2018
PIC / AIC:	-
Drawn By:	-
Checked By:	-
Comm. No.:	-

Project Title

TCMC PARKING STRUCTURE AND MAIN ENTRY

Sheet Title

GROUND FLOOR PHOTOMETRIC PLAN

Sheet Number

E7.1

2018.05.29 BIDSET

Copyright©2017by Cuningham Group Architecture, Inc. (All Rights Reserved)

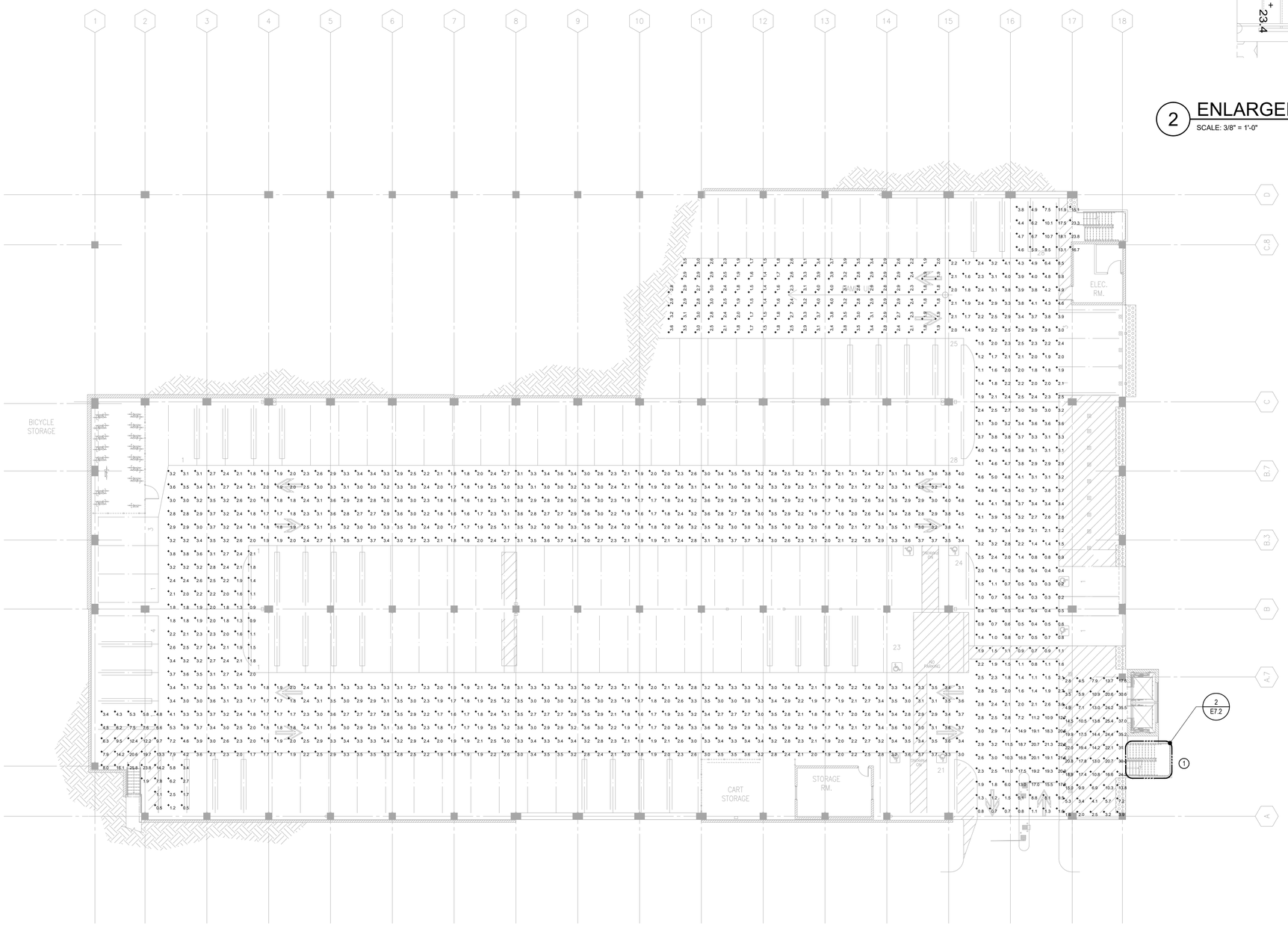

1 GROUND FLOOR PHOTOMETRIC EGRESS PLAN

SCALE: 1'-0" = 1/16"

NORTH



2 ENLARGED PHOTOMETRIC STAIRS PLAN

SCALE: 3/8" = 1'-0"

NORTH

GENERAL NOTES

1. REFER TO SHEET E0.1 FOR ABBREVIATIONS, SYMBOLS AND ADDITIONAL NOTES.

KEYNOTES

1. LIGHTING PHOTOMETRIC CALCULATION IS TYPICAL FOR STAIRWAYS INTERMEDIATE LANDING.

CUNINGHAM GROUP

Cuningham Group Architecture, Inc.

1030 G Street
San Diego, CA 92101

Tel: 619 849 1080
Fax: 619 849 1089

www.cuningham.com

Consultant

RANDALL LAMB
4757 Palm Avenue
La Mesa, CA 91942
(619) 713-5700

Revisions

No.	Date	Description

REGISTERED PROFESSIONAL ENGINEER — ELECTRICAL — STATE OF CALIFORNIA

1/11/2018
RL #SD17238.00

Document Phase:	Backcheck 1
Date:	MAY 24th, 2018
PIC / AIC:	-
Drawn By:	-
Checked By:	-
Comm. No.:	-

Project Title

TCMC PARKING STRUCTURE AND MAIN ENTRY

Sheet Title

GROUND FLOOR PHOTOMETRIC EGRESS PLAN

Sheet Number

E7.2

2018.05.29 BIDSET

Copyright©2017by Cuningham Group Architecture, Inc. (All Rights Reserved)

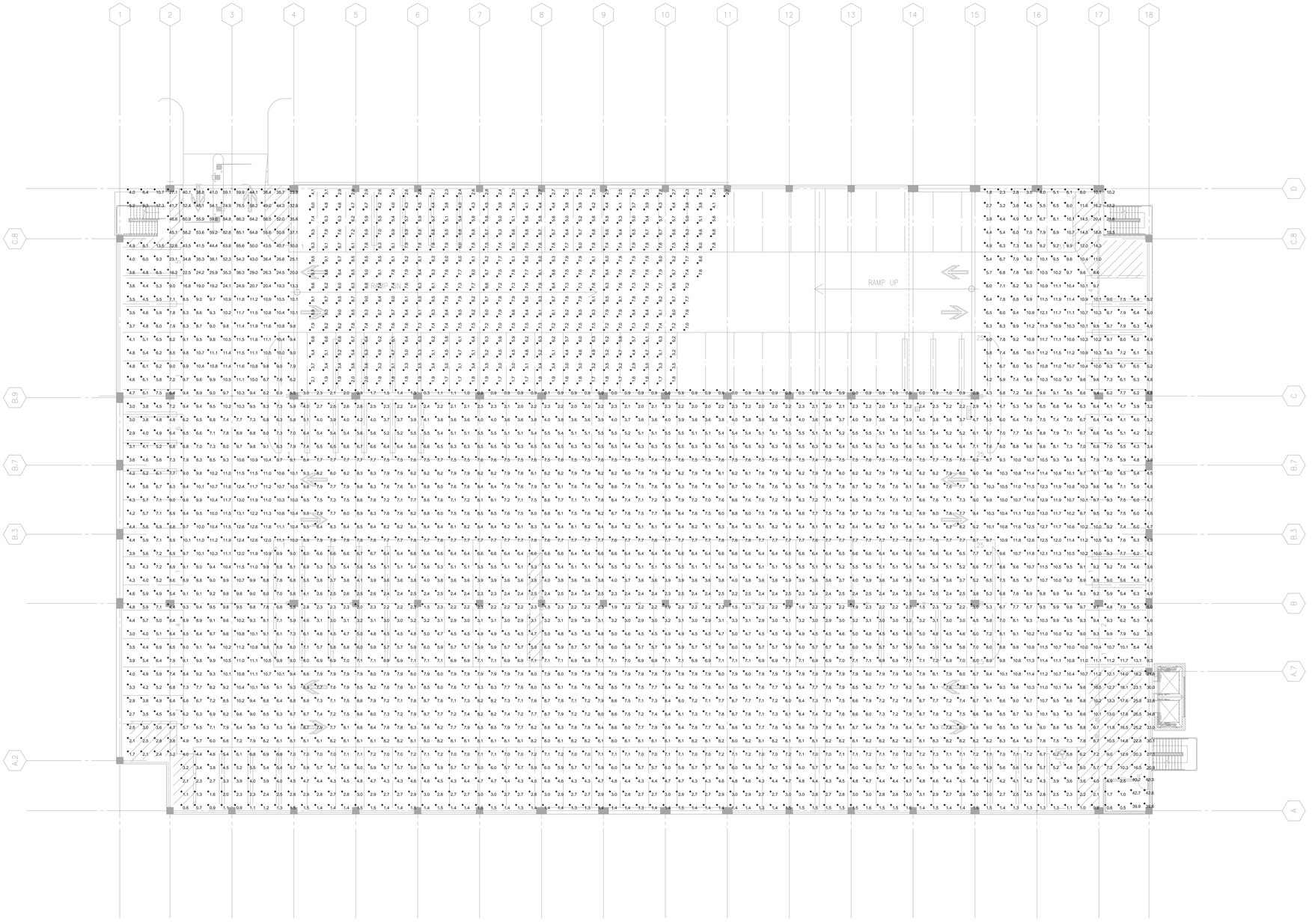

1 2ND FLOOR PHOTOMETRIC PLAN

SCALE: 1'-0" = 1/16"

NORTH

CUNINGHAM GROUP

Cuningham Group
Architecture, Inc.

1030 G Street
San Diego, CA 92101

Tel: 619 849 1080
Fax: 619 849 1089

www.cuningham.com

Consultant

RANDALL LAMB
4757 Palm Avenue
La Mesa, CA 91942
(619) 713-5700

Revisions

No.	Date	Description

REGISTERED PROFESSIONAL ENGINEER
ELECTRICAL
STATE OF CALIFORNIA

1/11/2018
RL #SD17238.00

Document Phase:	Backcheck 1
Date:	MAY 24th, 2018
PIC / AIC:	-
Drawn By:	-
Checked By:	-
Comm. No.:	-

Project Title

TCMC PARKING STRUCTURE AND MAIN ENTRY

2018.05.29 BIDSET

Sheet Title

2ND FLOOR PHOTOMETRIC PLAN

Sheet Number

E7.3

Copyright©2017by Cuningham Group Architecture, Inc. (All Rights Reserved)

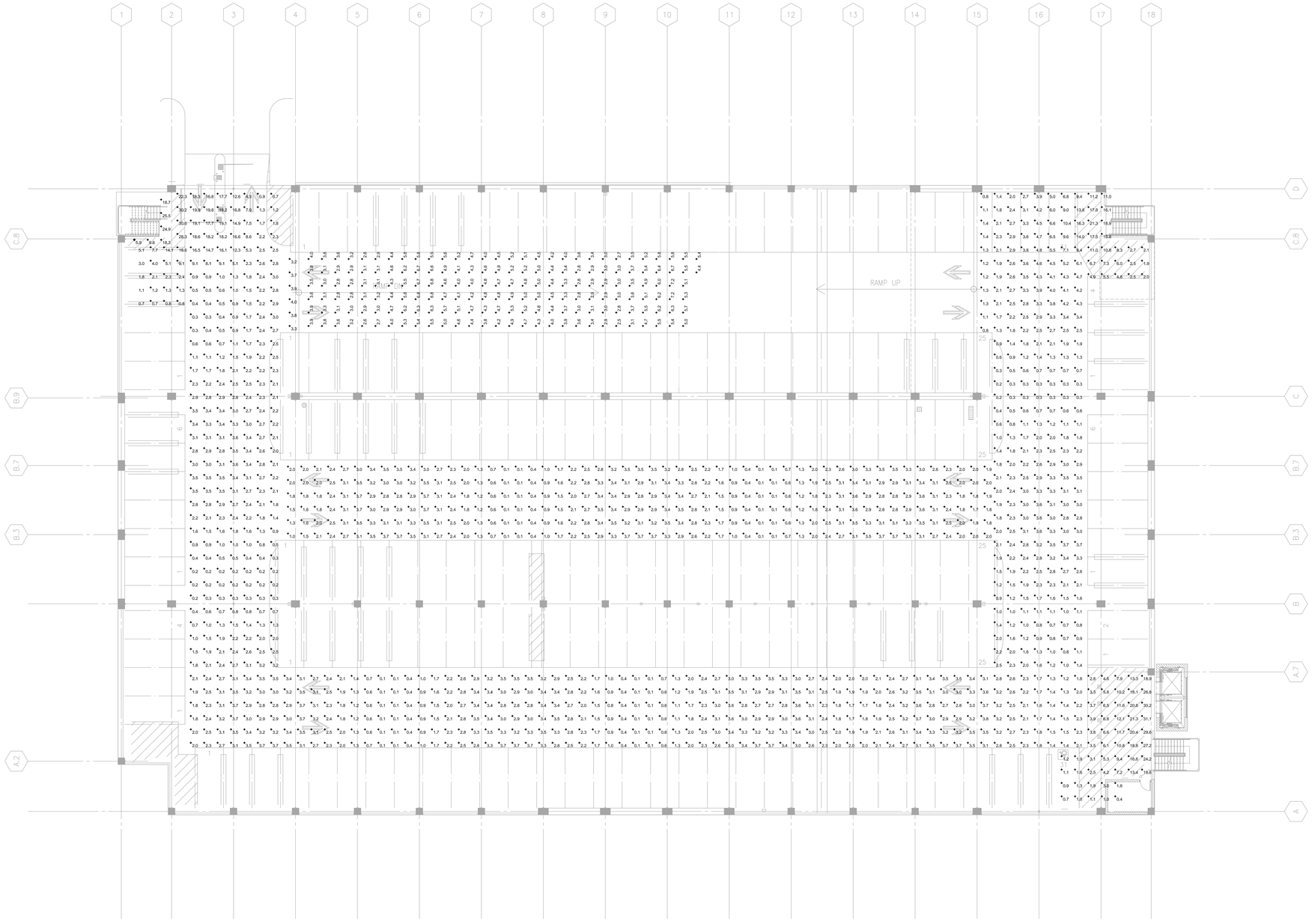

1 2ND FLOOR PHOTOMETRIC EGRESS PLAN
SCALE: 1'-0" = 1/16"

NORTH

2018.05.29 BIDSET

CUNINGHAM GROUP

Cuningham Group Architecture, Inc.
1030 G Street
San Diego, CA 92101
Tel: 619 849 1080
Fax: 619 849 1089
www.cuningham.com

Consultant

RANDALL LAMB
4757 Palm Avenue
La Mesa, CA 91942
(619) 713-5700

Revisions

No.	Date	Description

REGISTERED PROFESSIONAL ENGINEER
KURT D. RIDER
No. 17238
ELECTRICAL
STATE OF CALIFORNIA

1/11/2018
RL #SD17238.00

Document Phase:	Backcheck 1
Date:	MAY 24th, 2018
PIC / AIC:	-
Drawn By:	-
Checked By:	-
Comm. No.:	-

Project Title

TCMC PARKING STRUCTURE AND MAIN ENTRY

Sheet Title

2ND FLOOR PHOTOMETRIC EGRESS PLAN

Sheet Number

E7.4

Copyright © 2017 by Cuningham Group Architecture, Inc. (All Rights Reserved)

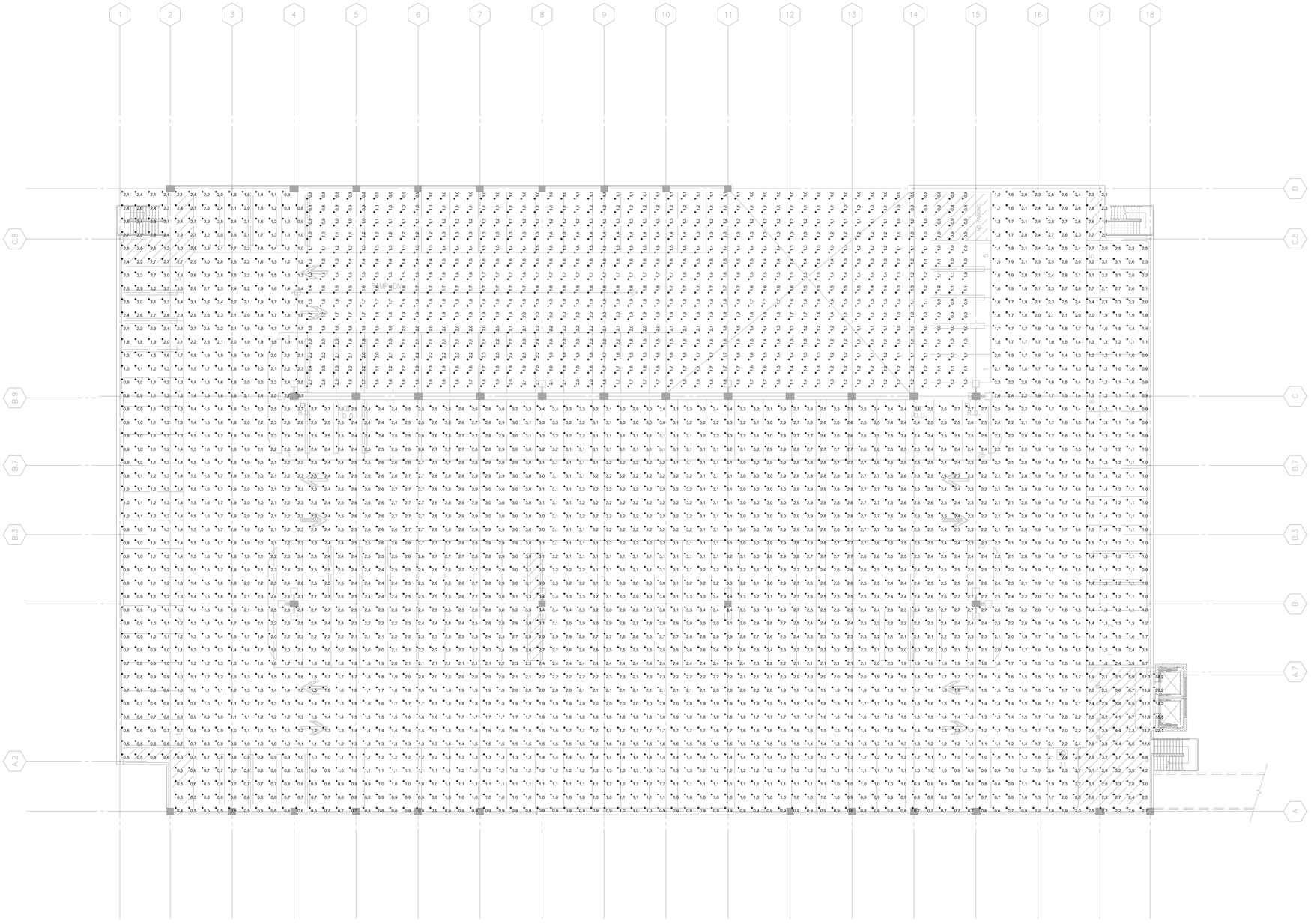

1 ROOF PHOTOMETRIC PLAN

SCALE: 1'-0" = 1/16"

NORTH

CUNINGHAM GROUP

Cuningham Group Architecture, Inc.

1030 G Street
San Diego, CA 92101

Tel: 619 849 1080
Fax: 619 849 1069

www.cuningham.com

Consultant

RANDALL LAMB
4757 Palm Avenue
La Mesa, CA 91942
(619) 713-5700

Revisions

No.	Date	Description

REGISTERED PROFESSIONAL ENGINEER — ELECTRICAL — STATE OF CALIFORNIA

1/11/2018
RL #SD17238.00

Document Phase:	Backcheck 1
Date:	MAY 24th, 2018
PIC / AIC:	-
Drawn By:	-
Checked By:	-
Comm. No.:	-

Project Title

TCMC PARKING STRUCTURE AND MAIN ENTRY

Sheet Title

ROOF PHOTOMETRIC PLAN

Sheet Number

E7.5

2018.05.29 BIDSET

Copyright©2017by Cuningham Group Architecture, Inc. (All Rights Reserved)

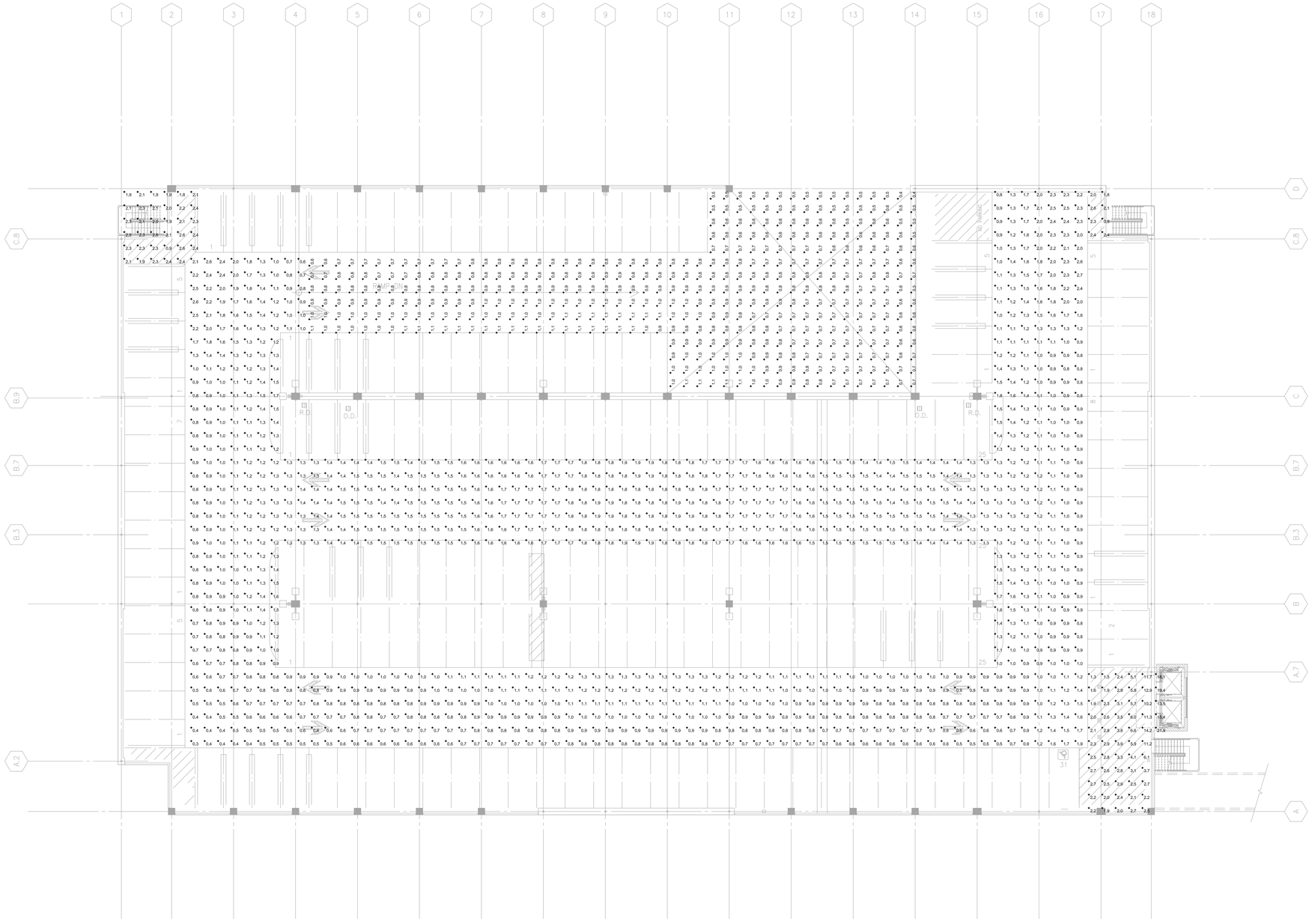

1 ROOF PHOTOMETRIC EGRESS PLAN

SCALE: 1'-0" = 1/16"

NORTH

CUNINGHAM GROUP

Cuningham Group Architecture, Inc.

1030 G Street
San Diego, CA 92101

Tel: 619 849 1080
Fax: 619 849 1069

www.cuningham.com

Consultant

RANDALL LAMB
4757 Palm Avenue
La Mesa, CA 91942
(619) 713-5700

Revisions

No.	Date	Description

REGISTERED PROFESSIONAL ENGINEER
ELECTRICAL
STATE OF CALIFORNIA

1/11/2018
RL #SD17238.00

Document Phase:	Backcheck 1
Date:	MAY 24th, 2018
PIC / AIC:	-
Drawn By:	-
Checked By:	-
Comm. No.:	-

Project Title

TCMC PARKING STRUCTURE AND MAIN ENTRY

2018.05.29 BIDSET

Sheet Title

ROOF PHOTOMETRIC EGRESS PLAN

Sheet Number

E7.6

Copyright©2017by Cuningham Group Architecture, Inc. (All Rights Reserved)

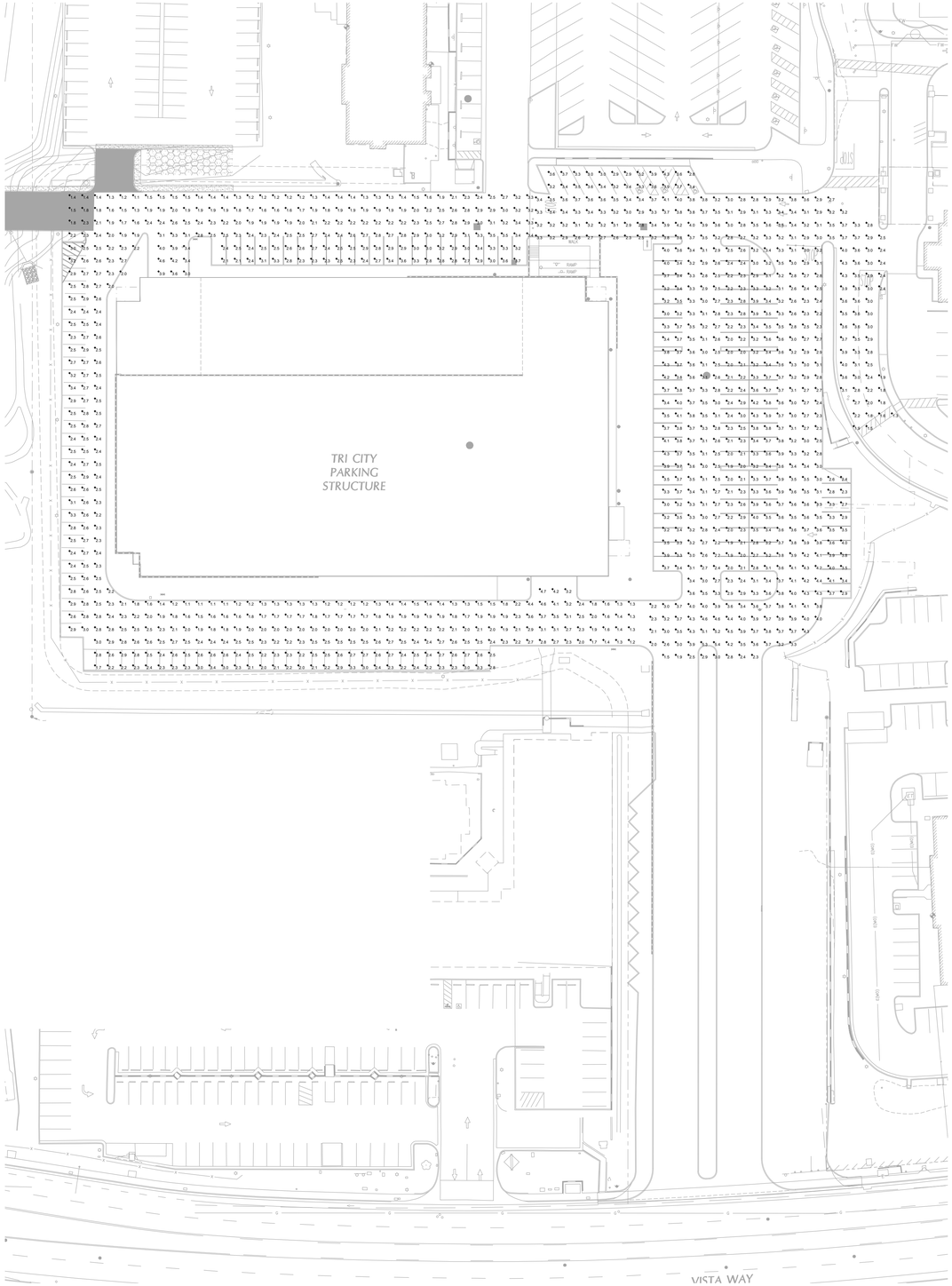

1 SITE PHOTOMETRIC PLAN
SCALE: 1" = 40'
NORTH

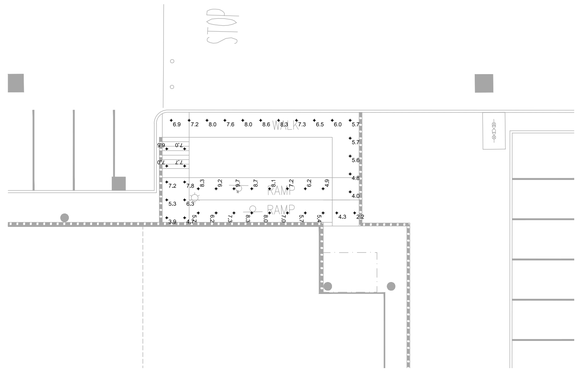

2 PEDESTRIAN RAMP PHOTOMETRIC PLAN
SCALE: 1/32" = 1'-0"
NORTH

CUNINGHAM GROUP

Cuningham Group
Architecture, Inc.

1030 G Street
San Diego, CA 92101

Tel: 619 849 1080
Fax: 619 849 1089

www.cuningham.com

Consultant

RANDALL LAMB
4757 Palm Avenue
La Mesa, CA 91942
(619) 713-5700

Revisions

No.	Date	Description

REGISTERED PROFESSIONAL ENGINEER
KUNG SHEN CHEN
No. 17238
ELECTRICAL
STATE OF CALIFORNIA

1/11/2018
RL #SD17238.00

Document Phase:	Backcheck 1
Date:	MAY 24th, 2018
PIC / AIC:	-
Drawn By:	-
Checked By:	-
Comm. No.:	-

Project Title

TCMC PARKING STRUCTURE AND MAIN ENTRY

Sheet Title

SITE PHOTOMETRIC PLAN

Sheet Number

E7.7

2018.05.29 BIDSET

Copyright © 2017 by Cuningham Group Architecture, Inc. (All Rights Reserved)

DEVICE AND WIRING LEGEND

SYMBOL	DESCRIPTION		WIRING	NOTES
ACP	ACCESS CONTROL PANEL		1 120VAC EMERGENCY DEDICATED 20AMP CIRCUIT 1 LAN/ WAN NETWORK CONNECTION	C,D
EP	EMERGENCY BLUE LIGHT PHONE		REFER TO DETAIL	
(1) CR	CR	CARD READER, PROXIMITY TYPE,	1 - #22/4 SHIELDED PLENUM CABLE FROM ACP (SRI DATA) 1 - #18/4 SHIELDED PLENUM CABLE FROM ACP (12V AND 24VCD) 1 - #18/6 SHIELDED PLENUM (FROM READER TO SRI ABOVE DOOR)	
	Ⓒ	CONCEALED MAGNETIC ALARM CONTACT	1-#18/2 PLENUM (AT DOOR CONTACTS WITH SINGLE CONNECTION) 2-#18/2 PLENUM (AT DPDT CONTACT ONLY)	B,G
	EL	ELECTRIFIED LOCK	USE RED/BLACK OF 18/4 ABOVE TO POWER LOCK	E
	RX	REQUEST TO EXIT	1-#18/6 PLENUM (FROM REX TO SRI ABOVE DOOR) USE GREEN/WHITE OF 18/4 ABOVE TO POWER REX AND SRI	
PS	POWER SUPPLY			

DEVICE AND WIRING LEGEND NOTES:

(1) CARD READER AND LOCAL ALARM SYMBOL ON FLOOR PLAN DRAWINGS INCLUDES ALL ASSOCIATED DEVICES (AS SHOWN IN BRACKETS ABOVE).

SECURITY DRAWING SCHEDULE

SHT #	SHEET NAME
SE0.01	SECURITY ELECTRONICS COVER SHEET
SE2.01	SECURITY ELECTRONICS GROUND LEVEL PLAN
SE2.02	SECURITY ELECTRONICS SECOND LEVEL PLAN
SE2.03	SECURITY ELECTRONICS THIRD (ROOF) LEVEL PLAN
SE4.01	SECURITY ELECTRONICS INSTALLATION DETAILS
SE4.02	SECURITY ELECTRONICS INSTALLATION DETAILS
SE4.03	SECURITY ELECTRONICS INSTALLATION DETAILS
SE5.01	SECURITY ELECTRONICS DEVICE SCHEDULE AND RISER

SCOPE OF WORK

1. CONTRACTOR SHALL PROVIDE, INSTALL AND PROGRAM A COMPLETELY FUNCTIONAL AND OPERATIONAL SYSTEM AS SHOWN ON DRAWINGS AND SPECIFICATIONS.
2. THE CONTRACTOR SHALL PROVIDE A PHASED INSTALLATION OF THE ELECTRONIC SECURITY BASED ON THE OWNER AND GENERAL CONTRACTOR'S SCHEDULE.
3. CONTRACTOR SHALL PROVIDE AND INSTALL ALL WIRING, DEVICES, CONNECTIONS, PROGRAMMING, AND COORDINATION REQUIRED FOR A COMPLETELY FUNCTIONAL AND OPERATIONAL SYSTEM. SECURITY CONTRACTOR SHALL PROVIDE ANY CUSTOM BACKBOXES REQUIRED.
4. INCLUDE FINAL CONNECTION, PROGRAMMING, TRAINING, AND TESTING OF THE WORK TO THE HEAD-END EQUIPMENT.PER THE OWNER'S, SECURITY CONSULTANT AND SPECIFICATION REQUIREMENTS.
5. ATTENDANCE AT CONSTRUCTION COORDINATION MEETINGS.
6. COORDINATION OF WORK WITH OTHER DESIGN AND INSTALLATION TRADES.
7. INSTALL END-OF-LINE (EOL) RESISTORS AS REQUIRED. EOL'S SHALL BE INSTALLED AT THE INDIVIDUAL POINTS OF PROTECTION NOT AT THE PANEL OR POPIT MODULES.
8. PROVIDE AND INSTALL ALL CONDUIT, BACK BOXES, PULL POWER BOXES AS SHOWN ON DRAWINGS.
9. IE CONTRACTOR WILL PROVIDE APPROPRIATE NETWORK CONNECTS AND NETWORK JACKS AT LOCATIONS AS SHOWN ON THE DRA\ WILL PROVIDE PC'S FOR WORKSTATIONS AND OTHER CONVENTIONAL COMPUTER EQUIPMENT REQUIRED FOR THE ACCESS CONTROL. REVIEW THE PROJECT SPECIFICATIONS AND DRAWING NOTES FOR SPECIFIC SCOPES OF WORK AND EQUIPMENT TO BE PROVIDED.

DEVICE LEGEND NOTES

A. ALL EXIT DOORS TO REMAIN FREE OPENING FROM EXIT SIDE.

B. ON DOUBLE DOORS INSTALL TWO (2) CONTACTS, SERIES THE CIRCUIT AT THE DOORS AND RUN ONE CABLE TO HEAD-END.

C. 120VAC POWER BY SECURITY CONTRACTOR. PROVIDE DEDICATED CIRCUITS TERMINATED PER THE PROJECT DETAILS.

D. NETWORK BY SECURITY CONTRACTOR.

E. ALL DOOR HARDWARE PROVIDED BY SECURITY CONTRACTOR.

F. CABLE TO BE PARALLEL.

G. PROVIDE TWO WIRES AT CONTACTS WITH CONNECTIONS TO THE ACCESS CONTROL SYSTEM AND TO THE INTRUSION ALARM SYSTEMS. ONLY ONE WIRE IS REQUIRED IF THE DEVICE AND POINT ONLY CONNECT TO ONE SYSTEM.

H. NETWORK CONNECTION BY SECURITY CONTRACTOR.

I. CABLES TO PARALLEL.

J. PC BY CITY OF PALM SPRINGS.

K. BY OTHERS

ABBREVIATIONS

SECURITY DEVICES
- ACP - ACCESS CONTROL PANEL
- CR - CARD READER
- CHDR - CITY HALL DOOR
- IAP - INTRUSION ALARM PANEL
- E - EXISTING
- E/R - EXISTING/REPLACE
- E/REL - EXISTING/RELOCATE
- E/REM - EXISTING/REMOVE
- E/RI - EXISTING/REINSTALL
- E/RRI - EXISTING/REMOVE AND REINSTALL
- N - NEW
- SRI - SINGLE READER INTERFACE MODULE

WIRING
- SH - SHIELDED
- TW - TWISTED

OTHER
- A.F.F. - ABOVE FINISHED FLOOR
- AFG - ABOVE FINISHED GRADER
- FBO - FURNISHED BY OTHERS
- F.O.V. - FIELD OF VIEW
- N/A - NOT APPLICABLE
- NTS - NOT TO SCALE
- RECP - RECEPTION
- S.O.C. - SECURITY OPERATIONS CENTER
- TBD - TO BE DETERMINED
- UON - UNLESS OTHERWISE NOTED
- VIF - VERIFY IN FIELD
- WP - WEATHER PROOF

DOOR EGRESS SYMBOL



ARROW INDICATES DIRECTION OF FREE MOVEMENT, DOOR IS CONTROLLED IN THE OPPOSITE DIRECTION OF EGRESS PATH.

DESCRIPTION OF REFERENCE SYMBOL



DETAIL NUMBER
SHEET NUMBER

INSTALLATION NOTES

1. ALL WORK SHALL BE IN ACCORDANCE WITH THE LATEST EDITION OF THE NATIONAL ELECTRICAL CODE AND ALL APPLICABLE LOCAL CODES. THE CONTRACTOR SHALL NOT INTERMIX ANY LINE VOLTAGE POWER WIRES (120VAC) WITH ANY LOW VOLTAGE SIGNAL OR CONTROL WIRES IN ANY CONDUIT.
2. VERIFY ALL FIELD DIMENSIONS AND CONDITIONS, NOTIFY THE OWNER OR THE OWNER'S REPRESENTATIVE OF ANY DISCREPANCIES FOUND. VERIFY DIMENSIONS OF ALL OWNER FURNISHED EQUIPMENT & SERVICES TO ENSURE PROPER COORDINATION WITH CONSTRUCTION.
3. SCHEDULE ALL WORK, INCLUDING CONSTRUCTION ACCESS AND STORAGE, WITH THE OWNER OR THOSE DESIGNATED BY THE OWNER. THE CONSTRUCTION SCHEDULE SHALL BE APPROVED BY THE OWNER PRIOR TO THE START OF CONSTRUCTION.
4. ALL UTILITIES REQUIRED FOR THE CONTINUOUS OPERATION OF ALL EXISTING FACILITIES MUST BE MAINTAINED IN SERVICE AT ALL TIMES (IF APPLICABLE).
5. CONTRACTOR SHALL PROVIDE DUST PROTECTION AS REQUIRED TO CONTAIN DUST AND DEBRIS WITHIN CONSTRUCTION AREA, BROOM CLEAN ALL AREAS EACH DAY.
6. WORK SHALL BE EXECUTED IN A CAREFUL AND ORDERLY MANNER WITH THE LEAST POSSIBLE DISTURBANCE TO THE PUBLIC AND OCCUPANTS OF EXISTING BUILDINGS. INTERRUPTING PERSONNEL AT WORK AS A RESULT OF THIS UNDERTAKING SHALL ALWAYS BE KEPT TO A MINIMUM. CONTRACTOR SHALL PROVIDE TRAFFIC AND SAFETY SIGNS AND BARRIERS WHERE NECESSARY. NO POWER LINE IN THE BUILDING SHALL BE SHUT DOWN UNLESS REQUESTED AND APPROVED BY THE OWNER IN ADVANCE.
7. THE CONTRACTORS AND SUBCONTRACTORS PERFORMING WORK ON PREMISES SHALL BE RESPONSIBLE FOR INITIATING, MAINTAINING AND SUPERVISING A REASONABLE AND PRUDENT SAFETY PROGRAM INCLUDING, BUT NOT LIMITED TO, THE ISOLATION OF WORK AREAS AND THE PROMPT REMOVAL OF ANY DEBRIS OR TOOLS WHICH MIGHT ENDANGER VISITORS OR EMPLOYEES OF THE FACILITY. ALL ROADS AND WALKWAYS SHALL REMAIN CLEAR AND UNOBSTRUCTED. WHEN NECESSARY ALTERNATE ROUTES MUST BE MAINTAINED, SHOULD UNSAFE CONDITIONS OCCUR.
8. COORDINATION WITH OTHER CONTRACTORS;
   IF ANY PART OF THE CONTRACTOR'S WORK DEPENDS UPON THE WORK OF A SEPARATE CONTRACTOR, THIS CONTRACTOR SHALL INSPECT SUCH OTHER WORK AND PROMPTLY REPORT IN WRITING TO THE OWNER OR THE OWNER'S REPRESENTATIVE ANY DEFECTS IN SUCH OTHER WORK THAT RENDER IT UNSUITABLE TO RECEIVE THE WORK OF THIS CONTRACTOR, FAILURE TO INSPECT AND REPORT SHALL CONSTITUTE AN ACCEPTANCE OF THE OTHER CONTRACTOR'S WORK EXCEPT AS TO DEFECTS WHICH DEVELOP IN OTHER CONTRACTOR'S WORK AFTER EXECUTION OF THIS CONTRACTOR'S WORK.
9. THE CONTRACTOR SHALL ALWAYS MAINTAIN, AT THE JOB SITE, UPDATED "RECORD" DRAWINGS. THESE DRAWINGS SHALL BE AVAILABLE TO THE OWNER, OWNER'S REPRESENTATIVE OR INSPECTORS UPON REQUEST.
10. NO CABLE RUN SHALL BE SPLICED UNLESS TWO OR MORE DEVICES ARE CONNECTED TO THE SAME CIRCUIT OR THE DEVICE IS PROVIDED FROM THE FACTORY WITH PIGTAIL WIRES. WHERE SPLICING IS REQUIRED, THE SPLICE SHALL BE SOLDERED AND TAPED, IT SHALL BE DONE IN EITHER A SPECIAL TERMINAL BOX, AT THE BACK BOX OR AT THE DEVICE TERMINAL LUGS. ALL SPLICE BOXES MUST BE IN ACCESSIBLE AREAS AND CLEARLY MARKED ON THE RECORD DRAWINGS.
11. ALL WIRES SHALL BE COLOR CODED AND SHALL BE CONNECTED IN A UNIFORM MANNER. TRANSPOSING OR CHANGING OF COLOR CODES SHALL NOT BE PERMITTED. WIRE AND CABLE SIZES, NUMBER OF CONDUCTORS, SHIELDING OR OTHER ITEMS LISTED ON THESE DRAWINGS ARE A GUIDE TO THE CORRECT PRODUCT REQUIRED TO ACHIEVE A WORKING SYSTEM AND REPRESENT THE MINIMUM ACCEPTABLE STANDARDS. CONTRACTOR SHALL CONSULT MANUFACTURER'S RECOMMENDATION FOR CABLING AND USE WHICHEVER IS GREATER IN QUALITY, QUANTITY, GAUGE, SHIELDING AND NUMBER OF CONDUCTORS.
12. ALL WIRING, INCLUDING SHIELDS, MUST BE FREE OF SHORTS, GROUNDS AND STRAY VOLTAGES. ALL EXPOSED SURFACE MOUNTED CABLE UNDER 12' A.F.F. SHALL BE IN CONDUIT WHERE INSTALLED IN AREAS WITHOUT CEILINGS.
13. ALL EXPOSED CABLE SHALL BE ROUTED IN EMT CONDUIT. UNDER GROUND CABLE SHALL BE RATED FOR WET APPLICATIONS.
14. A PRE PRINTED VINYL MATERIAL MARKER WRAPPED IN ADHESIVE CLEAR PLASTIC SHALL BE PROVIDED TO THE FOLLOWING:
    A. CABLES WITHIN 6" UPON ENTRY AT ANY SECURITY PANEL, TERMINATION OR SPLICE BOX.
    B. ALL WIRE LEADS WITHIN 2" FROM ANY TERMINAL BLOCK.
    C. THE CONTRACTOR SHALL SUBMIT SAMPLES OF MARKERS AND ANY NUMBERING OR MARKING SYSTEM FOR REVIEW PRIOR TO IMPLEMENTATION.
15. ALL NEW ELECTRICAL POWER SUPPLIES TO SECURITY EQUIPMENT OR DEVICES SHALL BE ON ANEMERGENCY SYSTEM INCLUDING UPS. ALL CONDUCTORS AND CIRCUIT BREAKERS SHALL BE SIZED IN ACCORDANCE WITH THEIR CONNECTED LOADS (20 AMP MINIMUM). ALL CIRCUITS SHALL BE DEDICATED. A GROUND CONDUCTOR SHALL ALWAYS BE INSTALLED IN ANY POWER WIRING. ALL SECURITY EQUIPMENT UTILIZING ELECTRICAL POWER SHALL ALSO BE ADEQUATELY GROUNDED.
16. WHERE A NEW CIRCUIT FOR SECURITY IS TAKEN FROM A PANEL BOARD UTILIZED FOR OTHER ELECTRICAL PURPOSES, THE BRANCH CIRCUIT BREAKER FOR SECURITY EQUIPMENT SHALL BE CLEARLY LABELED TO PREVENT ANY ACCIDENTAL SWITCH-OFF. NO SECURITY CIRCUIT IS TO BE SHARED WITH NON SECURITY EQUIPMENT UNLESS OTHERWISE NOTED ON THE DRAWINGS.
17. THE CONTRACTOR SHALL PROPERLY SEAL ALL CONDUIT OR SLEEVE PENETRATIONS THROUGH ALL WALLS, FLOORS AND CEILINGS USING APPROVED FIRE STOPPING MATERIALS AND SEALANTS REGARDLESS OF RATING AND AS PER APPLICABLE BUILDING CODES.
18. ALL ROUTING OF WIRING AND ANY RELATED CONDUIT IS DIAGRAMMATIC. CONTRACTOR SHALL FIELD VERIFY EXACT ROUTING PRIOR TO INSTALLATION.
19. PROVIDE PULL STRINGS IN ALL CONDUITS. PROVIDE BLANK COVERS ON ALL JUNCTION AND PULL BOXES.
20. ALL CONDUITS AND CABLE PATHS SHALL RUN PARALLEL WITH OR AT RIGHT ANGLES TO THE WALLS, IF MORE THAN THREE 90 DEGREE BENDS ARE TO BE USED IN THE CONDUIT RUN, INSERT A PULL BOX. CONTRACTOR SHALL SIZE THE BOX ACCORDINGLY. CONDUITS SHALL BE SIZED AS INDICATED ON THE DRAWINGS OR LARGER AS REQUIRED TO COMPLY WITH CODE. MINIMUM ALLOWABLE CONDUIT SIZE SHALL BE 3/4".
21. THE CONTRACTOR SHALL CLEAN AND THOROUGHLY CHECK ALL INSTALLED WORK PRIOR TO CONCEALING OF ARCHITECTURAL FINISHING. CLEAN ALL EXPOSED SURFACES AND NEW EQUIPMENT AFTER COMPLETION. THE CONTRACTOR SHALL ALSO REPAIR OR CLEAN ALL SOILED SURFACES, PAINTED SURFACES OR DAMAGED ARCHITECTURAL FINISHES TO MATCH THE ADJACENT AREA. WHERE REQUIRED, CLEANING, PATCHING OR PAINTING TO BRING THE AFFECTED SURFACE OR FINISH BACK TO ITS ORIGINAL CONDITION SHALL BE THE RESPONSIBILITY OF THE CONTRACTOR.
22. ALL SECURITY DEVICES AND EQUIPMENT SHALL BE INSTALLED WITH CONSIDERATION TO BARRIER FREE ACCESSIBILITY.
23. WHERE THE CONTRACTOR HAS TO CHANGE ANY DEVICE TYPE OR MOUNTING TO SUIT ACTUAL CONDITIONS, THIS SHALL BE DONE WITHOUT EXTRA COST TO THE OWNERS. THIS INCLUDES ANY ADDITIONAL PART TO BE SUPPLIED BY THE CONTRACTOR TO ACCOMPLISH PROPER MOUNTING OF A DEVICE. HOWEVER, IT SHALL BE REQUESTED, SUBMITTED AND APPROVED IN WRITING BEFORE COMMENCING THE WORK.
24. REFER TO ELECTRICAL PLANS FOR CONDUIT ROUTES FOR ALL VIDEO SURVEILLANCE AND ACCESS CONTROL CABLING.
25. THE CONTRACTOR SHALL UNDERTAKE THIS WORK IN ITS ENTIRETY IN ACCORDANCE WITH ITS DESIGN AND PURPOSE. ALL WORK SHALL BE CARRIED OUT IN A PROFESSIONAL MANNER WITH MAXIMUM EFFICIENCY AND EXCELLENT WORKMANSHIP.
26. NOT USED.
27. ALL EXIT DOORS TO REMAIN FREE OPENING FROM EXIT SIDE. U. O. N.
28. THE USE OF THE WORD "PROVIDE" IN CONNECTION WITH ANY ITEM SPECIFIED, IS INTENDED TO MEAN THAT SUCH SHALL BE FURNISHED, INSTALLED AND CONNECTED, WHERE SO REQUIRED, EXCEPT AS NOTED OTHERWISE.
29. PRIOR TO SUBMITTAL OF BID, NOTIFY, IN WRITING, SPECIFIED MATERIALS OR EQUIPMENT WHICH ARE EITHER UNAVAILABLE OR WILL CAUSE A DELAY IN CONSTRUCTION COMPLETION SCHEDULE.
30. ALL ELECTRICAL CIRCUITS AND POWER SHALL BE THE RESPONSIBILITY OF THE CONTRACTOR.
31. WHERE CONCRETE FLOORS ARE TO BE CORED, AN X-RAY MACHINE SHALL BE USED TO INSURE THAT NO STRUCTURAL ELEMENTS (E.G. REBAR) WILL BE COMPROMISED OR DAMAGED.
32. PENETRATIONS THROUGH THE FIRE RATED FLOORS AND WALLS SHALL BE PROTECTED IN ACCORDANCE WITH CBC SECTIONS 709.6 AND 710.1. SYSTEMS SHALL BE INSTALLED IN ACCORDANCE WITH MANUFACTURE'S INSTALLATIONS INSTRUCTIONS AND APPROVED LISTING. MANUFACTURE'S INSTALLATION INSTRUCTIONS AND APPROVED LISTINGS SHALL BE PROVIDED FOR REVIEW BY INSPECTION AUTHORITIES. SUBSTITUTIONS OF OR REVISIONS OR ADDITIONS TO APPROVED SYSTEMS SHALL BE SUBMITTED TO THE OSHPD FIRE MARSHAL (IF REQUIRED) AND THE INSPECTOR OF RECORD FOR REVIEW AND APPROVAL. REFER TO DETAILS FOR FLOOR AND WALL PENETRATION DETAILS.
33. ACCESS CONTROL DOORS SHALL ABIDE BY ALL CURRENT ADA STANDARDS FOR DEVICE PLACEMENT AND OPERATION.

CUNINGHAM GROUP

Cuningham Group Architecture, Inc.

1030 G Street
San Diego, CA 92101

Tel: 619 849 1080
Fax: 619 849 1089

www.cuningham.com

Consultant

Revisions

No.	Date	Description

2018.05.29 BIDSET

Document Phase:	Backcheck #1
Date:	MAY 24th, 2018
PIC / AIC:	-
Drawn By:	-
Checked By:	-
Comm. No.:	-

Project Title

TCMC PARKING STRUCTURE AND MAIN ENTRY

Sheet Title

SECURITY ELECTRONICS COVER SHEET

Sheet Number

SE0.01

Copyright© 2017 by Cuningham Group Architecture, Inc. (All Rights Reserved)

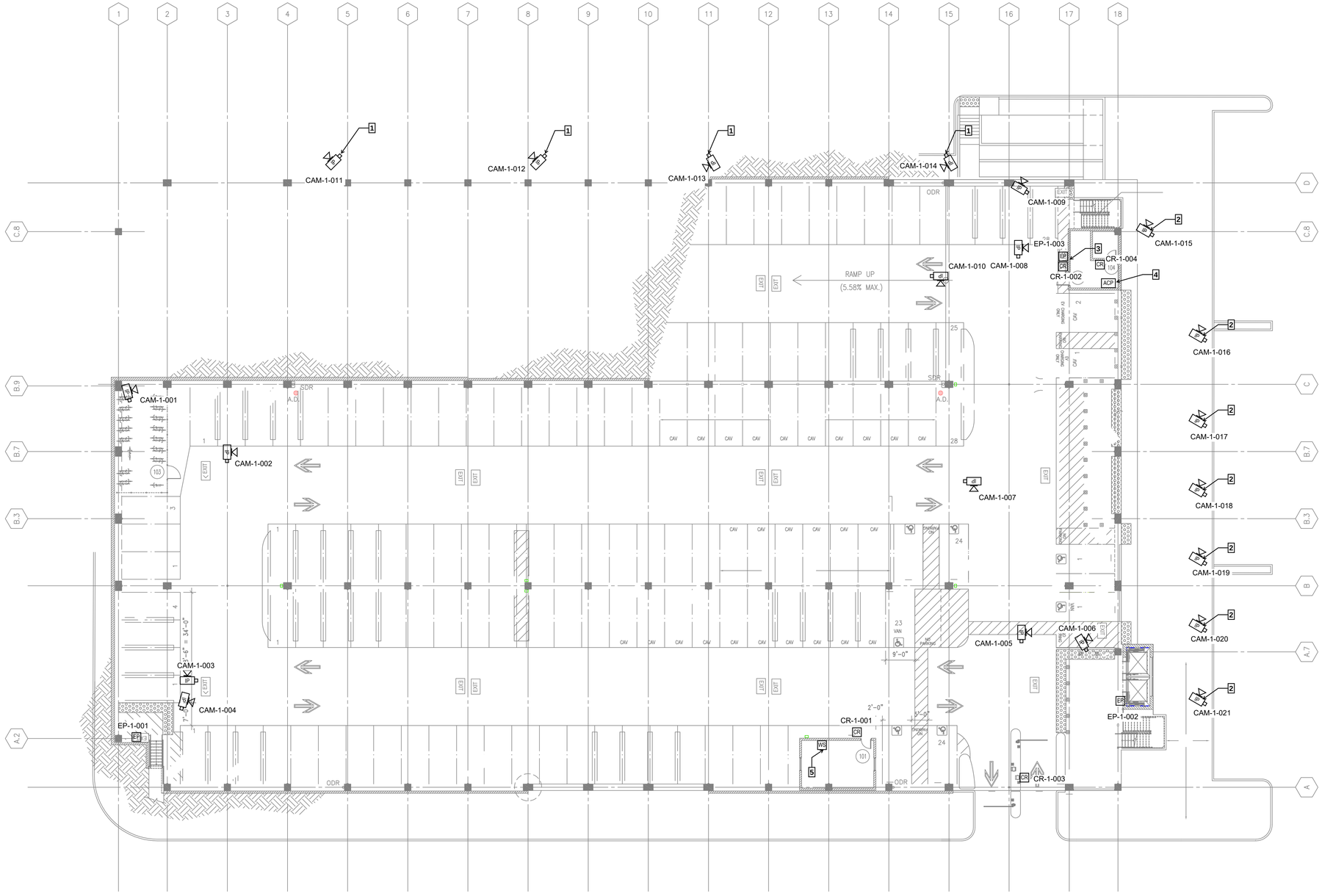

GROUND LEVEL PLAN

SCALE: 1/16"= 1'-0"

N

GENERAL NOTES

1. ALL CAMERA CABLING SHALL ROUTE BACK TO ELECTRICAL ROOM AND TERMINATE ON PATCH PANEL MOUNTED ON TELECOM EQUIPMENT RACK.
2. (1) CLIENT WORKSTATION SHALL BE PROVIDED AND INSTALLED.
3. PROVIDE AND INSTALL POE EXTENDERS FOR CAMERAS WITH DISTANCE LIMITATIONS ON THE ROOF LEVEL AND SECOND FLOOR AS NEEDED.

KEYNOTES

1. CAMERA MOUNTED TO SIDE OF PARKING STRUCTURE FOR OUTDOOR SURFACE LEVEL PARKING.
2. CAMERA SHOWN REPRESENT POLE MOUNTED CAMERAS TO VIEW OUTDOOR EAST SURFACE PARKING LOT.
3. TELECOM RACK LOCATION. REFER TO ELECTRICAL SHEET E5.4 VIEW 3 FOR ROOM LAYOUT. ROUTE AND TERMINATE ALL CAMERA CABLING TO THIS LOCATION.
4. ACP LOCATION. REFER TO SHEET E5.4 VIEW 3 FOR ROOM ENLARGED PLAN.
5. SECURITY WORKSTATION ON DESK.

CUNINGHAM GROUP

Cuningham Group Architecture, Inc.

1030 G Street
San Diego, CA 92101

Tel: 619 849 1080
Fax: 619 849 1089

www.cuningham.com

Consultant

Revisions

No.	Date	Description

2018.05.29 BIDSET

Document Phase:	Backcheck #1
Date:	MAY 24th, 2018
PIC / AIC:	-
Drawn By:	-
Checked By:	-
Comm. No.:	-

Project Title

TCMC PARKING STRUCTURE AND MAIN ENTRY

Sheet Title

SECURITY ELECTRONICS GROUND LEVEL PLAN

Sheet Number

SE2.01

Copyright© 2017 by Cuningham Group Architecture, Inc. (All Rights Reserved)

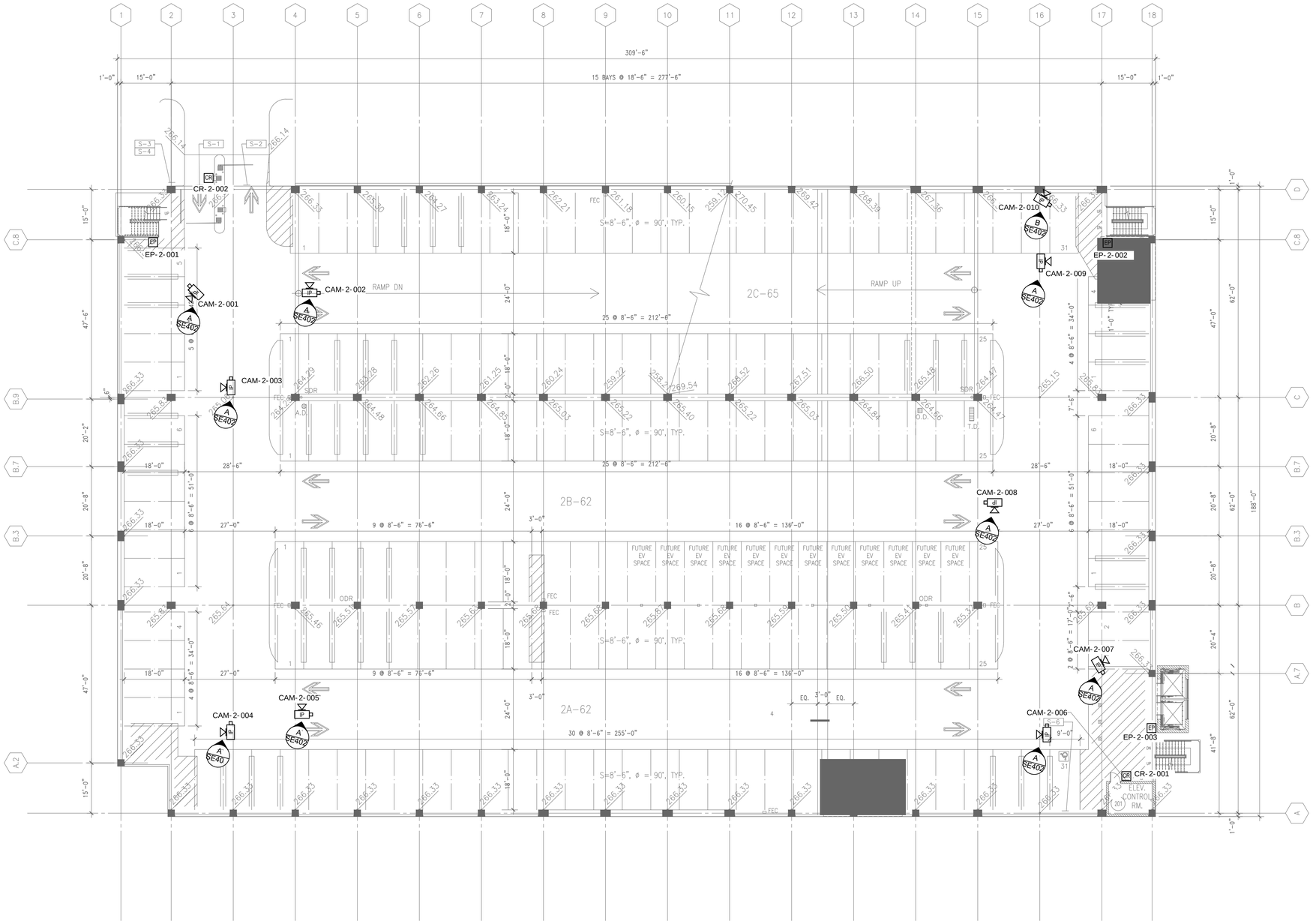

SECOND LEVEL PLAN

SCALE: 1/16"= 1'-0"

1

N

GENERAL NOTES

1. ALL CAMERA CABLING SHALL ROUTE BACK TO ELECTRICAL ROOM AND TERMINATE ON PATCH PANEL MOUNTED ON TELECOM EQUIPMENT RACK.
2. PROVIDE AND INSTALL POE EXTENDERS FOR CAMERAS WITH DISTANCE LIMITATIONS ON THE ROOF LEVEL AND SECOND FLOOR AS NEEDED.

KEYNOTES

CUNINGHAM GROUP

Cuningham Group Architecture, Inc.

1030 G Street
San Diego, CA 92101

Tel: 619 849 1080
Fax: 619 849 1089

www.cuningham.com

Consultant

Revisions

No.	Date	Description

2018.05.29 BIDSET

Document Phase:	Backcheck #1
Date:	MAY 24th, 2018
PIC / AIC:	-
Drawn By:	-
Checked By:	-
Comm. No.:	-

Project Title

TCMC PARKING STRUCTURE AND MAIN ENTRY

Sheet Title

SECURITY ELECTRONICS SECOND LEVEL PLAN

Sheet Number

SE2.02

Copyright © 2017 by Cuningham Group Architecture, Inc. (All Rights Reserved)

GENERAL NOTES
1. ALL CAMERA CABLING SHALL ROUTE BACK TO ELECTRICAL ROOM AND TERMINATE ON PATCH PANEL MOUNTED ON TELECOM EQUIPMENT RACK. 2. PROVIDE AND INSTALL POE EXTENDERS FOR CAMERAS WITH DISTANCE LIMITATIONS ON THE ROOF LEVEL AND SECOND FLOOR AS NEEDED.
KEYNOTES

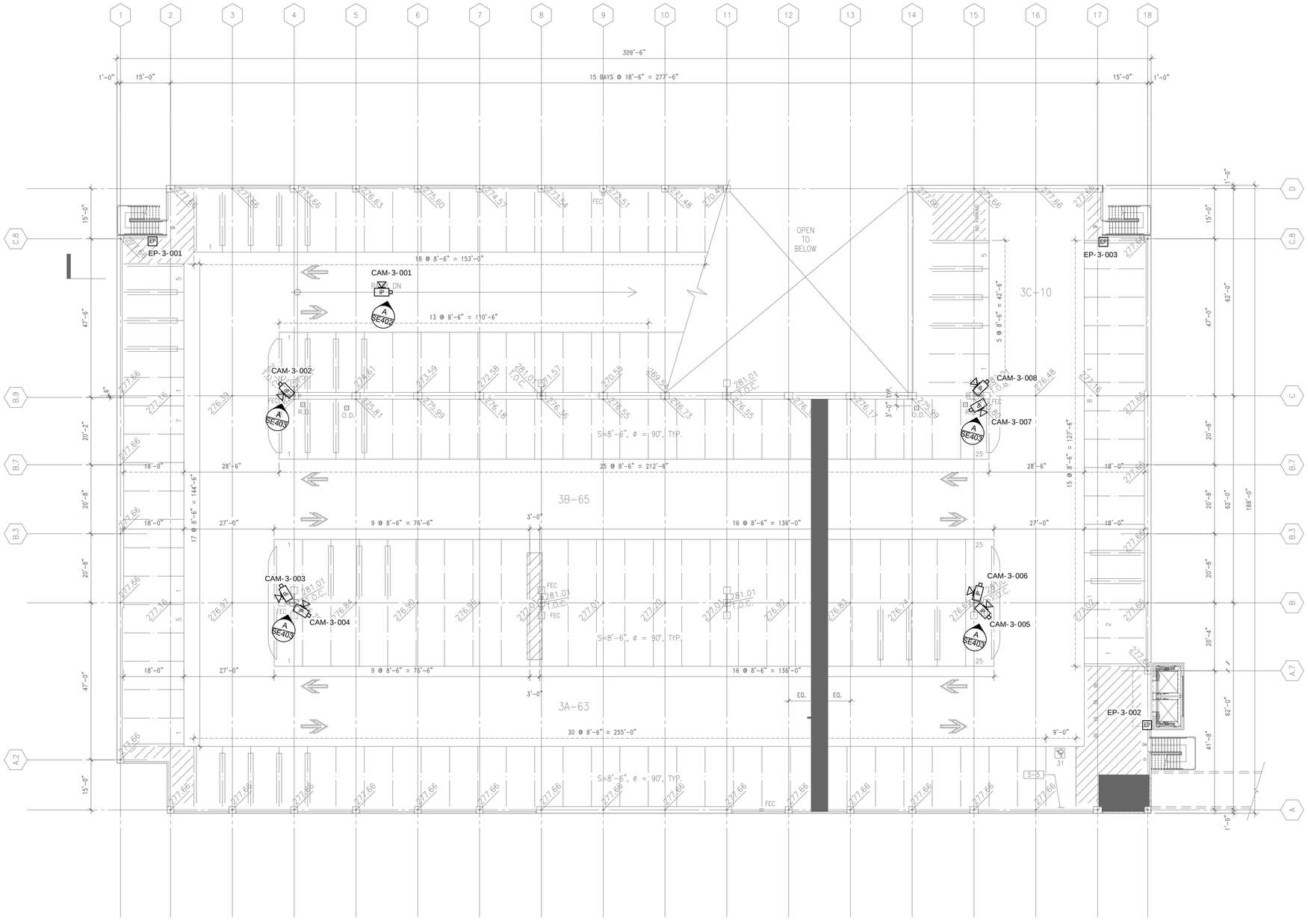

THIRD (ROOF) LEVEL PLAN 1

SCALE: 1/16"= 1'-0"

CUNINGHAM GROUP

Cuningham Group Architecture, Inc.

1030 G Street
San Diego, CA 92101

Tel: 619 849 1080
Fax: 619 849 1089

www.cuningham.com

Consultant

Revisions

No.	Date	Description

2018.05.29 BIDSET

Document Phase:	Backcheck #1
Date:	MAY 24th, 2018
PIC / AIC:	-
Drawn By:	-
Checked By:	-
Comm. No.:	-

Project Title

TCMC PARKING STRUCTURE AND MAIN ENTRY

Sheet Title

SECURITY ELECTRONICS THIRD (ROOF) LEVEL PLAN

Sheet Number

SE2.03

Copyright © 2017 by Cuningham Group Architecture, Inc. (All Rights Reserved)

GENERAL NOTES:

1. PROVIDED BY USC ITS: NETWORK POE SWITCH FOR CONNECTION OF EACS AND VSS DEVICES. TELEPHONE TERMINATION BLOCK FOR CONNECTION OF EMERGENCY PHONE TO USC PBX SYSTEM.
2. NEW SECURITY TERMINAL CABINET IS TO BE INSTALLED IN ELECTRICAL ROOM. CONTRACTOR SHALL PROVIDE NECESSARY BOARDS FOR FULLY FUNCTIONING SYSTEM.
3. COORDINATE EMERGENCY PHONE SIGNAL REQUIREMENTS WITH USC ITS AT TELEPHONE TERMINATION BLOCK.

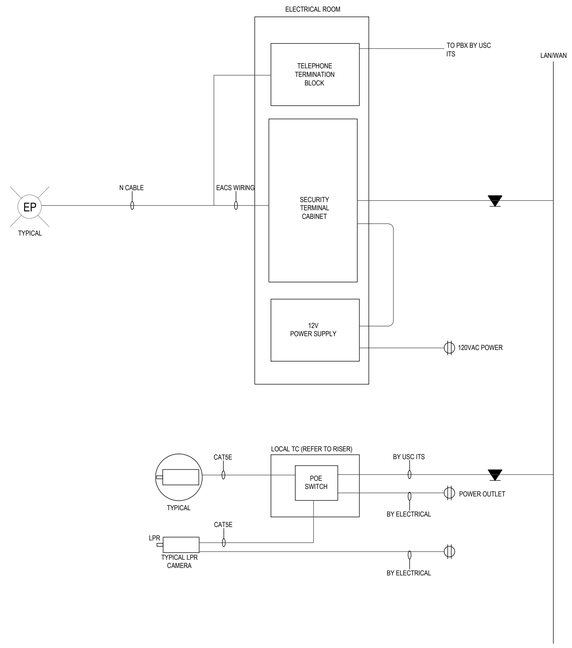

SECURITY SINGLE LINE DIAGRAM | SCALE | D

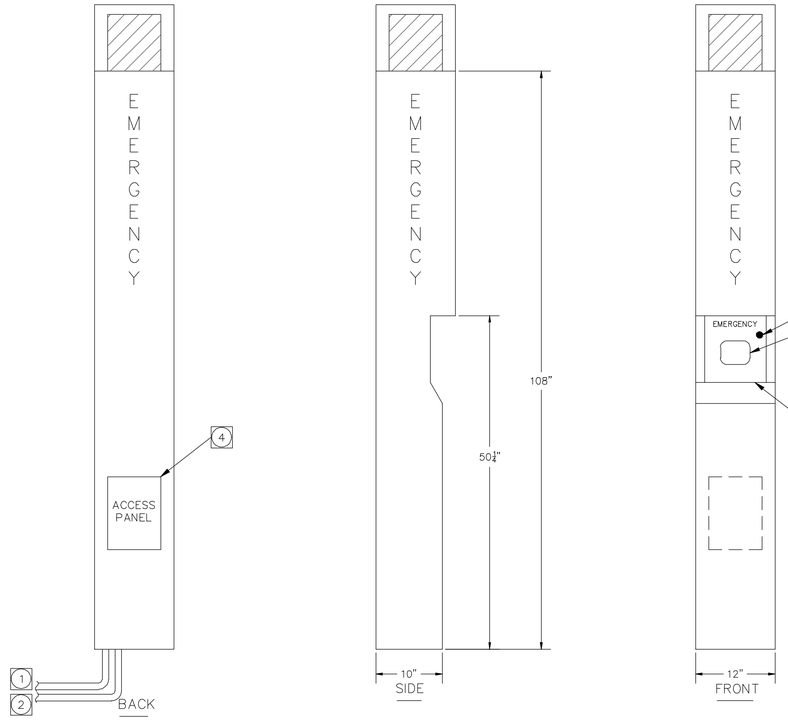

GENERAL NOTES:

1. REFER TO ELECTRICAL SHEETS FOR ELECTRICAL REQUIREMENTS.
2. REFER TO PARKING LEVEL PLANS AND RISER DIAGRAM FOR CONDUIT SIZES AND CABLE TERMINATION POINTS.
3. REFER TO PARKING LEVEL PLANS FOR EMERGENCY PHONE LOCATIONS.
4. EMERGENCY PHONE, STANCHION, FIXTURES, CONDUITS, BOXES, AND RELATED HARDWARE SHALL BE WEATHER RESISTANT AND SUITABLE FOR WET LOCATIONS.
5. SEAL PENETRATIONS WITH SILICONE SEALANT OR GASKETS APPROPRIATE FOR THE CONDITIONS.
6. CONDUIT SHALL BE SIZED ACCORDINGLY TO NATIONAL ELECTRIC CODE (NEC), UNLESS OTHERWISE NOTED.
7. REFER TO SECURITY SPECIFICATIONS FOR USC STANDARD COLOR AND FINISH REQUIREMENT.

REFERENCE NOTES:

1. VOICE WIRING – PROVIDE TELEPHONE AND EACS WIRING, (1) PR # 16 FOR AACS PER TOWER AND (1) PR CAT–6 FOR VOICE PER TOWER.
2. PROVIDE 120VAC, BLUE VISUAL INDICATOR.
3. COORDINATE PROVISION FOR CONCRETE BASE.
4. PROVIDE TAMPER RESISTANT HARDWARE.

EXTERIOR RADIUS EMERGENCY PHONE TOWER | SCALE | B

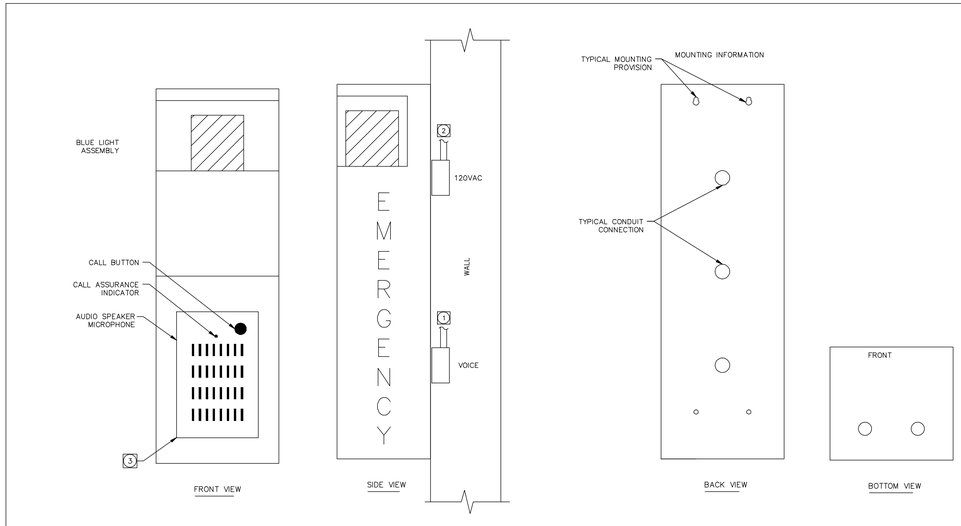

GENERAL NOTES:

1. **REFER TO ELECTRICAL SHEETS FOR ELECTRICAL REQUIREMENTS.**
2. **REFER TO PARKING LEVEL PLANS AND RISER DIAGRAM FOR CONDUIT SIZES AND CABLE TERMINATION POINTS.**
3. **REFER TO PARKING LEVEL PLANS FOR EMERGENCY PHONE LOCATIONS.**
4. **EMERGENCY PHONE, STANCHION, FIXTURES, CONDUITS, BOXES AND RELATED HARDWARE SHALL BE WEATHER RESISTANT AND SUITABLE FOR WET LOCATIONS.**
5. **SEAL PENETRATIONS WITH SILICONE SEALANT OR GASKETS APPROPRIATE FOR THE CONDITIONS.**
6. **CONDUIT SHALL BE SIZED ACCORDINGLY TO NATIONAL ELECTRIC CODE (NEC), UNLESS OTHERWISE NOTED.**
7. **REFER TO SECURITY SPECIFICATIONS FOR USC STANDARD COLOR AND FINISH REQUIREMENTS.**

REFERENCE NOTES:

1. **PROVIDE TELEPHONE AND EACS WIRING**
2. **PROVIDE 120VAC FOR BLUE VISUAL INDICATOR**
3. **PROVIDE TAMPER RESISTANT HARDWARE.**

EXTERIOR WALL/COLUMN MOUNTED EMERGENCY PHONE STATION | SCALE | A

Cuningham Group Architecture, Inc.

1030 G Street
San Diego, CA 92101

Tel: 619 849 1080
Fax: 619 849 1089

www.cuningham.com

Consultant

Revisions

No.	Date	Description

Document Phase: Backcheck #1
Date: MAY 24th, 2018
PIC / AIC: -
Drawn By: -
Checked By: -
Comm. No.: -

Project Title

TCMC PARKING STRUCTURE AND MAIN ENTRY

Sheet Title

SECURITY ELECTRONICS **INSTALLATION DETAILS**

Sheet Number

SE4.01

2018.05.29 BIDSET

Copyright © 2017 by Cuningham Group Architecture, Inc. (All Rights Reserved)

GENERAL NOTES:

1. REFER TO FLOOR PLANS FOR CAMERA TYPES AND LOCATIONS.
2. PROVIDE WEATHERPROOF ENCLOSURES, FITTINGS, BACK BOXES, CONDUITS AND FINISHES.

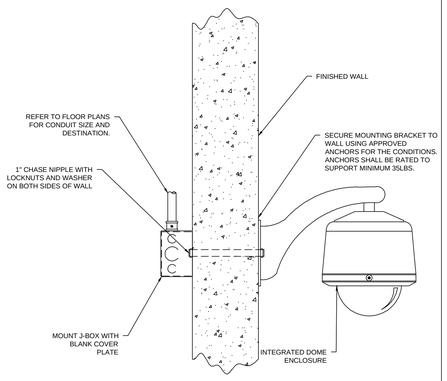

OPTION #1

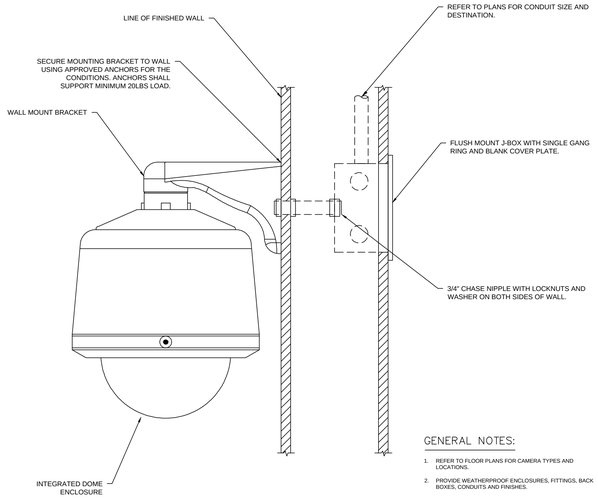

GENERAL NOTES:

1. REFER TO FLOOR PLANS FOR CAMERA TYPES AND LOCATIONS.
2. PROVIDE WEATHERPROOF ENCLOSURES, FITTINGS, BACK BOXES, CONDUITS AND FINISHES.

OPTION #2

TYPICAL EXTERIOR CAMERA DETAILS | SCALE | D

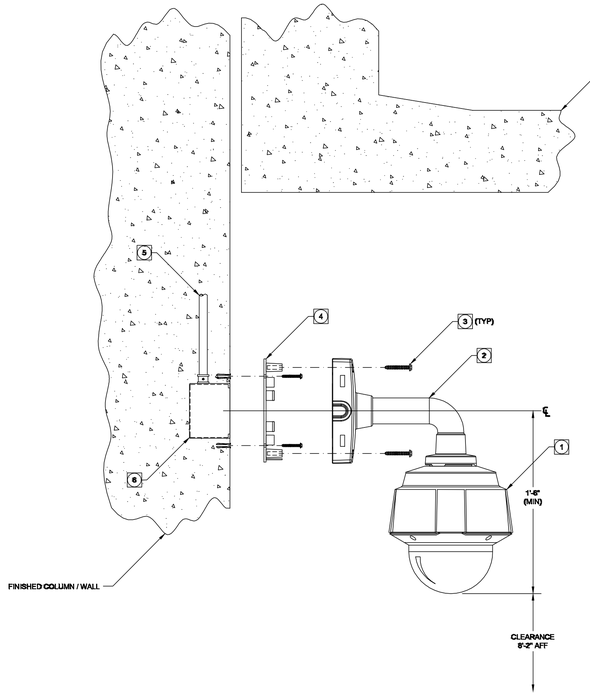

GENERAL NOTES:

1. **REFER TO PARKING LEVEL PLANS FOR CAMERA LOCATIONS.**
2. **REFER TO PARKING LEVEL PLANS AND RISER DIAGRAM FOR CONDUIT SIZES AND CABLE TERMINATION POINTS.**
3. **LOWEST POINT OF CAMERA INSTALLATION SHALL NOT INTRUDE BELOW THE MAXIMUM ALLOWABLE VEHICLE CLEARANCE. REFER TO ARCHITECTURAL DRAWINGS FOR FINAL CLEARANCE DIMENSION(S).**
4. **SECURITY CONTRACTOR TO PROVIDE TERMINATION OF CABLES AT CAMERA LOCATIONS.**

REFERENCE NOTES:

1. **PROVIDE IP POWER OVER ETHERNET (PoE) DOME FIXED CAMERA MOUNTED TO SIDE OF WALL / COLUMN.**
2. **PROVIDE CAMERA MOUNT SUPPLIED OR AS SPECIFIED BY THE CAMERA MANUFACTURER.**
3. **PROVIDE MOUNTING AND ASSEMBLY HARDWARE SUPPLIED OR AS SPECIFIED BY THE CAMERA MANUFACTURER.**
4. **PROVIDE ADAPTER PLATE AS SPECIFIED BY THE CAMERA MANUFACTURER.**
5. **CONCEALED METALLIC CONDUIT AND CABLE TO GROUND LEVEL EQUIPMENT ROOM.**
6. **FLUSH MOUNT MASONRY BOX WITH 1-GANG RING.**

TYPICAL COLUMN / WALL MOUNT DOME FIXED CAMERA | SCALE | B

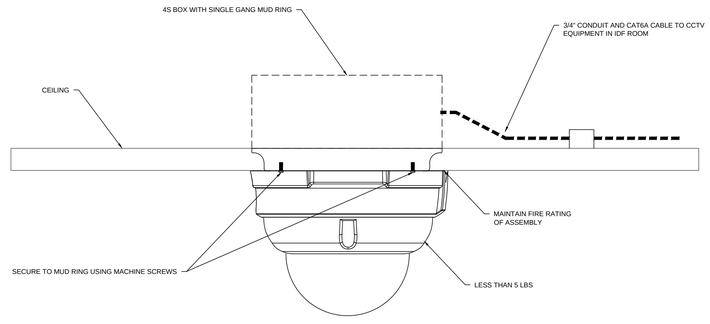

TYPICAL BOOTH CAMERA DETAIL | SCALE | C

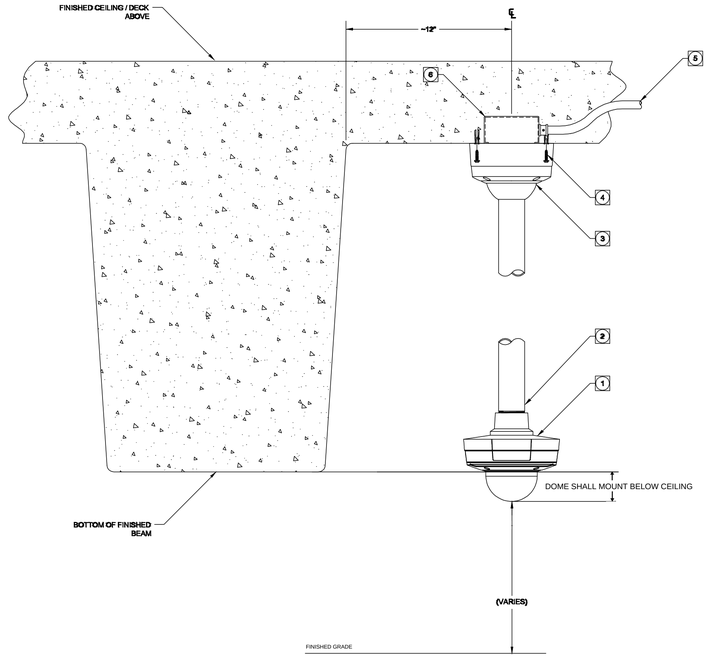

GENERAL NOTES:

1. **REFER TO PARKING LEVEL PLANS FOR CAMERA LOCATIONS.**
2. **REFER TO PARKING LEVEL PLANS AND RISER DIAGRAM FOR CONDUIT SIZES AND CABLE TERMINATION POINTS.**
3. **LOWEST POINT OF CAMERA INSTALLATION SHALL NOT INTRUDE BELOW THE MAXIMUM ALLOWABLE VEHICLE CLEARANCE. REFER TO ARCHITECTURAL DRAWINGS FOR FINAL CLEARANCE DIMENSION(S).**
4. **SECURITY CONTRACTOR TO PROVIDE TERMINATION OF CABLES AT CAMERA LOCATIONS.**

REFERENCE NOTES:

1. **PROVIDE IP POWER OVER ETHERNET (PoE) DOME FIXED CAMERA MOUNTED TO DECK.**
2. **PROVIDE 1.5" NPT EXTENSION PIPE AND SIZE IN-FIELD TO LENGTH AS REQUIRED TO OBTAIN APPROPRIATE CLEARANCE.**
3. **PROVIDE CAMERA PENDANT MOUNT SUPPLIED OR AS SPECIFIED BY THE CAMERA MANUFACTURER.**
4. **PROVIDE EPOXY ANCHORS, FASTENERS AND APPURTENANCES REQUIRED TO SECURE DEVICE INSTALLATION FOR THE CONDITIONS (TYPICAL).**
5. **CONCEALED METALLIC CONDUIT AND CABLE TO GROUND LEVEL EQUIPMENT ROOM.**
6. **FLUSH MOUNT MASONRY BOX.**

TYPICAL DECK MOUNT DOME FIXED CAMERA AT VEHICLE ISLES | SCALE | A

Cuningham Group Architecture, Inc.

1030 G Street
San Diego, CA 92101

Tel: 619 849 1080
Fax: 619 849 1089

www.cuningham.com

Consultant

Revisions

No.	Date	Description

2018.05.29 BIDSET

Document Phase:	Backcheck #1
Date:	MAY 24th, 2018
PIC / AIC:	-
Drawn By:	-
Checked By:	-
Comm. No.:	-

Project Title

TCMC PARKING STRUCTURE AND MAIN ENTRY

Sheet Title

SECURITY ELECTRONICS INSTALLATION DETAILS

Sheet Number

SE4.02

Copyright© 2017 by Cuningham Group Architecture, Inc. (All Rights Reserved)

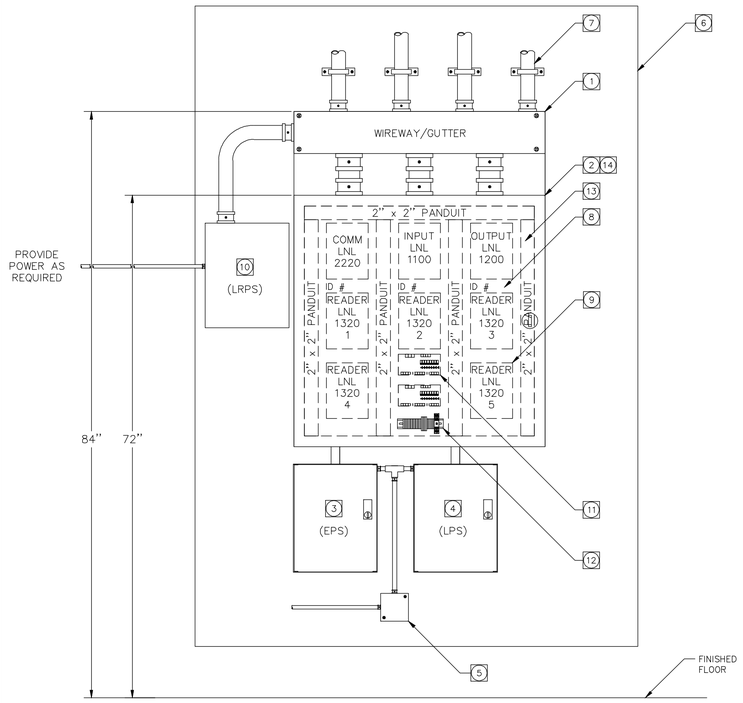

REFERENCE NOTES:

1. PROVIDE 6"Hx36"Wx6"D (MIN.) SECURITY PULL BOX WIREWAY/GUTTER. DO NOT SPLICE WIRE WITHIN WIREWAY.
2. PROVIDE LOCKABLE SECURITY TERMINAL CABINET(S) (STC) TO ENCLOSE ELECTRONIC ACCESS CONTROL SYSTEM (EACS) INTELLIGENT CONTROLLER, DUAL CARD READER INTERFACE MODULES, INPUT AND OUTPUT CONTROL MODULES, AND TAMPER SWITCH.
3. PROVIDE 12VDC EACS ELECTRONICS POWER SUPPLY (EPS) WITH LOCKABLE ENCLOSURE WITH TAMPER SWITCH AND BACKUP BATTERY FOR ACCESS CONTROL EQUIPMENT.
4. PROVIDE 24VDC LOCK POWER SUPPLY (LPS) WITH LOCKABLE ENCLOSURE WITH TAMPER SWITCH AND BACKUP BATTERY. INTERFACE LPS WITH FIRE ALARM CONTROL PANEL (FACP).
5. PROVIDE (2) 120VAC/20AMP EMERGENCY POWER CIRCUITS, DEDICATED TO SERVING POWER REQUIREMENTS OF THE SECURITY SYSTEM DEVICES MOUNTED ON WALL.
6. PROVIDE 3/4"D FIRE RATED PLYWOOD BACKBOARD FOR THE MOUNTING OF SECURITY EQUIPMENT TO WALLS.
7. CONDUIT(S) TO FIELD DEVICE LOCATIONS AS REQUIRED: REFER TO PLANS FOR LOCATION AND CONDUIT DESTINATION.
8. INDICATE EACH BOARD HARDWARE DESIGNATION.
9. IDENTIFY WIRING WITH PERMANENT LABEL WITHIN 2" OF TERMINATION INDICATING TERMINATION IDENTIFICATION.
10. PROVIDE, AS REQUIRED, 24VDC LATCH RETRACTION LOCK POWER SUPPLY (LRPS) FOR EXIT DEVICES. MOUNT LRPS AT SECURITY TERMINAL CABINET (STC) WHERE DOOR(S) ARE WITHIN 500' OF STC. INTERFACE LPS WITH FIRE ALARM CONTROL PANEL (FACP).
11. PROVIDE LOCK OUTPUT FUSE BLOCK.
12. PROVIDE TERMINAL BLOCKS AS REQUIRED.
13. ROUTE WIRING FROM FIELD DEVICES TO TERMINATION POINT WITHIN WIRFWAY

GENERAL NOTES:

1. COORDINATE WITH THE OWNER THE EXACT LOCATION OF PENETRATIONS FOR THE ROUTING OF CONDUIT AND PLENUM RATED CABLE.
2. ALLOW A MINIMUM OF 36" ACCESS CLEARANCE IN FRONT OF CABINETS AND ENCLOSURES.
3. REFER TO ELECTRICAL DRAWINGS FOR DESIGNATE 120VAC EMERGENCY POWER SOURCE(S) ALLOCATED TO EACH STC.
4. PROVIDE TAMPER SWITCH FOR EACH ENCLOSURE.
5. PROVIDE ONLY THE EQUIPMENT AT EACH STC REQUIRED TO PROVIDE A COMPLETE AND FUNCTIONAL EACS. REFER TO SPECIFICATIONS FOR ADDITONAL INFORMATION.
6. THE TYPICAL ADDITION OF STC SUB-PANEL(S) SHALL INCLUDE THE REQUIRED EACS MODULES. INCLUDE ADDITIONAL INTELLIGENT CONTROLLER BOARD ONLY WHEN MAXIMUM QUANTITY OF DEVICES IS EXCEEDED.

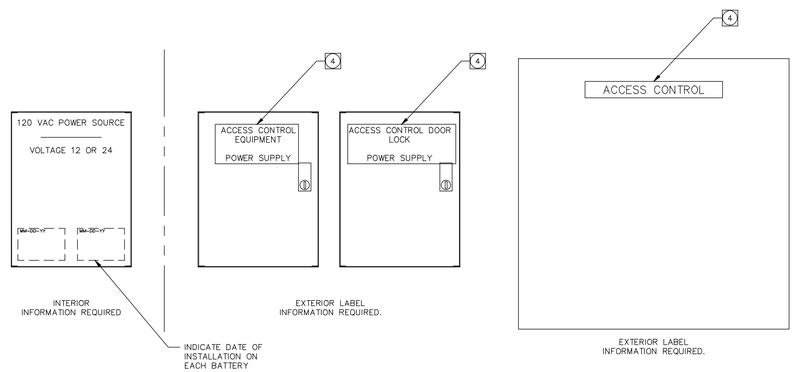

REFERENCE NOTES:

1. PROVIDE AS-BUILD DRAWING PLAN OF AREA SERVED BY ASSEMBLY.
2. PROVIDE AS-BUILD LAYOUT PLAN OF EQUIPMENT IN THIS ASSEMBLY AND WITH SOFTWARE IDENTIFICATION, HARDWARE ADDRESS SWITCH SETTING OF EACH CONTROLLER OR BOARD.
3. PROVIDED AS-BUILD DEVICES IP AND MAC ADDRESSES
4. PROVIDE ENGRAVED LABELS.

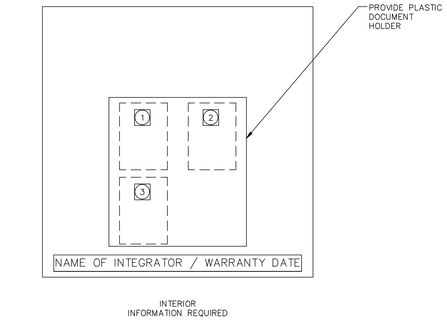

SECURITY TERMINAL CABINET DETAIL | SCALE | B

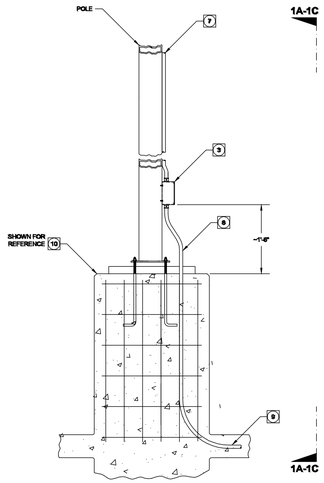

1D - SIDE VIEW

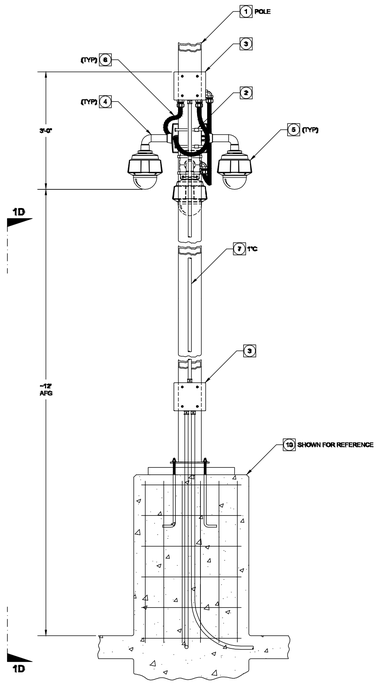

1C - MULTIPLE CAMERAS
(3 OR 4 CAMERAS)

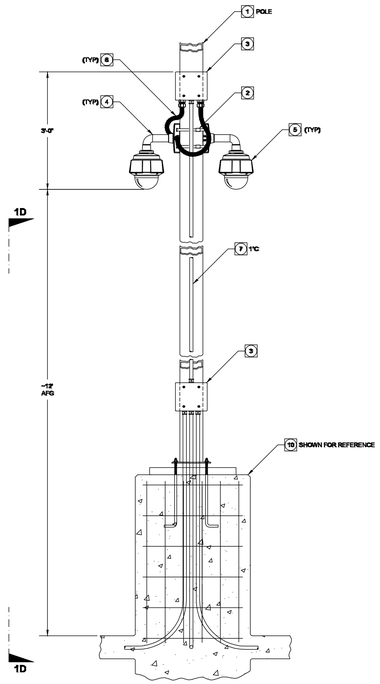

1B - DUAL CAMERAS

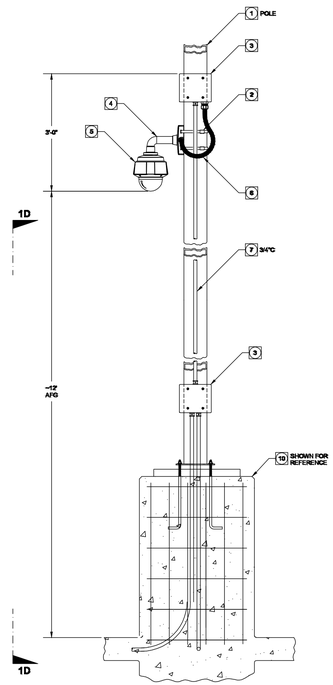

1A - SINGLE CAMERA

GENERAL NOTES:

1. REFER TO PARKING LEVEL PLANS AND RISER DIAGRAM FOR CONDUIT SIZES AND CABLE TERMINATION POINTS.
2. REFER TO PARKING LEVEL PLANS FOR CAMERA LOCATIONS AND QUANTITY OF CAMERAS PER POLE.
3. CAMERAS, MOUNTS, FIXTURES, CONDUITS, BOXES AND RELATED HARDWARE SHALL BE WEATHER RESISTANT AND SUITABLE FOR WET LOCATIONS.
4. SEAL PENETRATIONS AT LIGHT POLES WITH SILICONE SEALANT OR GASKETS APPROPRIATE FOR THE CONDITIONS.
5. NEW CONDUIT TO BE 1-INCH MINIMUM. CONDUIT SHALL BE SIZED ACCORDINGLY TO NATIONAL ELECTRIC CODE (NEC), UNLESS OTHERWISE NOTED.

REFERENCE NOTES:

1. LIGHT POLE WITH LIGHT FIXTURE ABOVE.
2. PROVIDE STAINLESS STEEL FASTENING SYSTEM PROVIDED OR AS RECOMMENDED BY THE CAMERA MOUNT MANUFACTURER.
3. PROVIDE 4" DEEP, COVERED 4"X8" SECURITY PULL BOX WITH COVER GASKET SUITABLE FOR WET LOCATIONS. APPLY SILICONE SEALING COMPOUND TO PENETRATION PLUGS.
4. PROVIDE POLE MOUNT FOR CAMERA AS RECOMMENDED BY THE CAMERA MANUFACTURER.
5. PROVIDE FIXED COLOR IP/PoE CAMERA WITHIN ENCLOSURE (TYPICAL).
6. PROVIDE NONMETALLIC LIQUID TIGHT FLEXIBLE CONDUIT SUITABLE FOR OUTDOOR LOCATIONS WITH DRIP LOOP (TYPICAL).
7. PROVIDE GALVANIZED RIGID CONDUIT (GRC) TO SECURITY PULL BOX AT CAMERA(S).
8. PROVIDE COUPLING FROM STUB-UP CONDUIT TO TRANSITIONAL CONDUIT AS REQUIRED (TYPICAL).
9. CONDUIT(S) FOR SIGNAL CABLES FROM SECURITY PULL BOX (SPB) AT BASE OF POLE. REFER TO SECURITY PARKING LEVEL PLANS AND SECURITY RISER DIAGRAM FOR CONDUIT SIZES, ROUTING AND CABLE TERMINATION POINTS.
10. BASE OF POLE MAY VARY FROM FINAL CONFIGURATION AND IS ILLUSTRATED FOR REFERENCE TO CONDUIT REQUIREMENTS.

TYPICAL POLE MOUNT DOME FIXED CAMERA DETAIL | SCALE | A

CUNINGHAM GROUP

Cuningham Group Architecture, Inc.
1030 G Street
San Diego, CA 92101
Tel: 619 849 1080
Fax: 619 849 1089
www.cuningham.com

Consultant

Revisions

No.	Date	Description

2018.05.29 BIDSET

Document Phase:	Backcheck #1
Date:	MAY 24th, 2018
PIC / AIC:	-
Drawn By:	-
Checked By:	-
Comm. No.:	-

Project Title

TCMC PARKING STRUCTURE AND MAIN ENTRY

Sheet Title

SECURITY ELECTRONICS INSTALLATION DETAILS

Sheet Number

SE4.03

Copyright © 2017 by Cuningham Group Architecture, Inc. (All Rights Reserved)

VIDEO SURVEILLANCE

Camera Number	Device Label	Floor	Camera Type	Intended View	Drawing Number	Mount Style	Detail Number	Camera Resolution	Camera Height/Note	Termination Point	Wire Group	Notes
1	CAM-1-001	Ground	Interior Fixed MiniDome	Bike Rack	SE2.01	Wall	D / SE4.02	1080P	1	ELEC RM 102	H	
2	CAM-1-002	Ground	Interior Fixed MiniDome	Parking Driveway	SE2.01	Ceiling	A / SE4.02	1080P	2	ELEC RM 102	H	
3	CAM-1-003	Ground	Interior Fixed MiniDome	Parking Driveway	SE2.01	Ceiling	A / SE4.02	1080P	2	ELEC RM 102	H	
4	CAM-1-004	Ground	Interior Fixed MiniDome	Emergency Phone	SE2.01	Ceiling	A / SE4.02	1080P	2	ELEC RM 102	H	
5	CAM-1-005	Ground	Interior Fixed MiniDome	Parking Entrance	SE2.01	Ceiling	A / SE4.02	1080P	2	ELEC RM 102	H	
6	CAM-1-006	Ground	Interior Fixed MiniDome	Emergency Phone	SE2.01	Ceiling	A / SE4.02	1080P	2	ELEC RM 102	H	
7	CAM-1-007	Ground	Interior Fixed MiniDome	Parking Driveway	SE2.01	Ceiling	A / SE4.02	1080P	2	ELEC RM 102	H	
8	CAM-1-008	Ground	Interior Fixed MiniDome	Parking Driveway	SE2.01	Ceiling	A / SE4.02	1080P	2	ELEC RM 102	H	
9	CAM-1-009	Ground	Interior Fixed MiniDome	Emergency Phone	SE2.01	Wall	D / SE4.02	1080P	1	ELEC RM 102	H	
10	CAM-1-010	Ground	Interior Fixed MiniDome	Parking Ramp	SE2.01	Ceiling	A / SE4.02	1080P	2	ELEC RM 102	H	
11	CAM-1-011	Ground	Exterior Bullet IP Fixed	Exterior Parking	SE2.01	Pole	A / SE4/03	5MP	3	ELEC RM 102	H	
12	CAM-1-012	Ground	Exterior Bullet IP Fixed	Exterior Parking	SE2.01	Pole	A / SE4/03	5MP	3	ELEC RM 102	H	
13	CAM-1-013	Ground	Exterior Bullet IP Fixed	Exterior Parking	SE2.01	Wall	D / SE4.02	5MP	1	ELEC RM 102	H	
14	CAM-1-014	Ground	Exterior Bullet IP Fixed	Exterior Parking	SE2.01	Wall	D / SE4.02	5MP	1	ELEC RM 102	H	
15	CAM-1-015	Ground	Exterior Bullet IP Fixed	Exterior Parking	SE2.01	Wall	D / SE4.02	5MP	1	ELEC RM 102	H	
16	CAM-1-016	Ground	Exterior Bullet IP Fixed	Exterior Parking	SE2.01	Pole	A / SE4/03	5MP	3	ELEC RM 102	H	
17	CAM-1-017	Ground	Exterior Bullet IP Fixed	Exterior Parking	SE2.01	Pole	A / SE4/03	5MP	3	ELEC RM 102	H	
18	CAM-1-018	Ground	Exterior Bullet IP Fixed	Exterior Parking	SE2.01	Pole	A / SE4/03	5MP	3	ELEC RM 102	H	
19	CAM-1-019	Ground	Exterior Bullet IP Fixed	Exterior Parking	SE2.01	Pole	A / SE4/03	5MP	3	ELEC RM 102	H	
20	CAM-1-020	Ground	Exterior Bullet IP Fixed	Exterior Parking	SE2.01	Pole	A / SE4/03	5MP	3	ELEC RM 102	H	
21	CAM-1-021	Ground	Exterior Bullet IP Fixed	Exterior Parking	SE2.01	Pole	A / SE4/03	5MP	3	ELEC RM 102	H	
22	CAM-2-001	Second	Interior Fixed MiniDome	Emergency Phone	SE2.02	Ceiling	A / SE4.02	1080P	2	ELEC RM 102	H	4
23	CAM-2-002	Second	Interior Fixed MiniDome	Parking Driveway	SE2.02	Ceiling	A / SE4.02	1080P	2	ELEC RM 102	H	4
24	CAM-2-003	Second	Interior Fixed MiniDome	Parking Entrance	SE2.02	Ceiling	A / SE4.02	1080P	2	ELEC RM 102	H	4
25	CAM-2-004	Second	Interior Fixed MiniDome	Parking Driveway	SE2.02	Ceiling	A / SE4.02	1080P	2	ELEC RM 102	H	4
26	CAM-2-005	Second	Interior Fixed MiniDome	Parking Driveway	SE2.02	Ceiling	A / SE4.02	1080P	2	ELEC RM 102	H	4
27	CAM-2-006	Second	Interior Fixed MiniDome	Parking Driveway	SE2.02	Ceiling	A / SE4.02	1080P	2	ELEC RM 102	H	4
28	CAM-2-007	Second	Interior Fixed MiniDome	Emergency Phone	SE2.02	Ceiling	A / SE4.02	1080P	2	ELEC RM 102	H	4
29	CAM-2-008	Second	Interior Fixed MiniDome	Parking Driveway	SE2.02	Ceiling	A / SE4.02	1080P	2	ELEC RM 102	H	4
30	CAM-2-009	Second	Interior Fixed MiniDome	Parking Driveway	SE2.02	Ceiling	A / SE4.02	1080P	2	ELEC RM 102	H	4
31	CAM-2-010	Second	Interior Fixed MiniDome	Emergency Phone	SE2.02	Wall	D / SE4.02	1080P	1	ELEC RM 102	H	4
32	CAM-3-001	Roof (Third)	Interior Fixed MiniDome	Parking Ramp	SE2.03	Ceiling	A / SE4.02	1080P	2	ELEC RM 102	H	4
33	CAM-3-002	Roof (Third)	Exterior Fixed MiniDome	Emegrency Phone	SE2.03	Pole	A / SE4/03	1080P	3	ELEC RM 102	H	4
34	CAM-3-003	Roof (Third)	Exterior Fixed MiniDome	Parking Driveway	SE2.03	Pole	A / SE4/03	1080P	3	ELEC RM 102	H	4
35	CAM-3-004	Roof (Third)	Exterior Fixed MiniDome	Parking Driveway	SE2.03	Pole	A / SE4/03	1080P	3	ELEC RM 102	H	4
36	CAM-3-005	Roof (Third)	Exterior Fixed MiniDome	Emergency Phone	SE2.03	Pole	A / SE4/03	1080P	3	ELEC RM 102	H	4
37	CAM-3-006	Roof (Third)	Exterior Fixed MiniDome	Parking Driveway	SE2.03	Pole	A / SE4/03	1080P	3	ELEC RM 102	H	4
38	CAM-3-007	Roof (Third)	Exterior Fixed MiniDome	Parking Driveway	SE2.03	Pole	A / SE4/03	1080P	3	ELEC RM 102	H	4
39	CAM-3-008	Roof (Third)	Exterior Fixed MiniDome	Emergency Phone	SE2.03	Pole	A / SE4/03	1080P	3	ELEC RM 102	H	4

Wire Schedule

H	CAT6 OR OTHER CATEGORY CABLE SPECIFIED BY DIVISION 27

Notes

GENERAL	
1	Minimum 10' AFF
2	2' Under Ceiling As Shown In Detail
3	See Detail
4	Utilize POE injectors if selected cable route will be beyond distance limitation.

ACCESS CONTROL

Device Number	Device Label	Floor	Device Type	Location	Drawing Number	Mount Style	Termination Point	Wire Group	Notes
1	CR-1-001	Ground	HID SmartCard	Storage Rm 101	SE2.01	Wall	ELEC RM 102	H	
2	CR-1-002	Ground	HID SmartCard	Elec Rm 102	SE2.01	Wall	ELEC RM 102	H	
3	CR-1-003	Ground	HID SmartCard	Parking Entry Gate	SE2.01	Wall	ELEC RM 102	H	1
4	CR-1-004	Ground	HID SmartCard	Elec Rm 104	SE2.01	Wall	ELEC RM 102	H	
5	CR-2-001	Second	HID SmartCard	Elev. Control Room 201	SE2.02	Wall	ELEC RM 102	H	
6	CR-2-002	Second	HID SmartCard	Parking Entry Gate	SE2.02	Wall	ELEC RM 102	H	1

Wire Schedule

H	See Cover Sheet Symbol Legend

Notes

GENERAL	
1	Coordinate installation with parking gate specs/contractor for mounting and integration.

ACCESS CONTROL

Device Number	Device Label	Floor	Device Type	Location	Drawing Number	Mount Style	Termination Point	Wire Group	Notes
1	CR-1-001	Ground	HID SmartCard	Storage Rm 101	SE2.01	Wall	ELEC RM 102	H	
2	CR-1-002	Ground	HID SmartCard	Elec Rm 102	SE2.01	Wall	ELEC RM 102	H	
3	CR-1-003	Ground	HID SmartCard	Parking Entry Gate	SE2.01	Wall	ELEC RM 102	H	1
4	CR-2-001	Second	HID SmartCard	Elev. Control Room 201	SE2.02	Wall	ELEC RM 102	H	
5	CR-2-002	Second	HID SmartCard	Parking Entry Gate	SE2.02	Wall	ELEC RM 102	H	1

Wire Schedule

H	See Cover Sheet Symbol Legend

Notes

GENERAL	
1	Coordinate installation with parking gate specs/contractor for mounting and integration.

CUNINGHAM GROUP

Cuningham Group Architecture, Inc.

1030 G Street
San Diego, CA 92101

Tel: 619 849 1080
Fax: 619 849 1089

www.cuningham.com

Consultant

Revisions

No.	Date	Description

2018.05.29 BIDSET

Document Phase: Backcheck #1
Date: MAY 24th, 2018
PIC / AIC: -
Drawn By: -
Checked By: -
Comm. No.: -

Project Title

TCMC PARKING STRUCTURE AND MAIN ENTRY

Sheet Title

SECURITY ELECTRONICS DEVICE SCHEDULE

Sheet Number

SE5.01

Copyright © 2017 by Cuningham Group Architecture, Inc. (All Rights Reserved)